STREBEL
HEATING TECHNOLOGY

Clean Heating | Naturally STREBEL

HEAT PUMPS





S-ASX-OPVi

Commercial Natural Refrigerant Air-To-Water Heat Pumps

90 & 135kW

R454C

Air-to-Water Heat Pump

The S-ASX-OPVi range comprises 2 models offering LTHW heating, as well as Hot Water Production, in 90kW and 135kW outputs in the A7W35 condition. The OPVi product designation refers to multiple low volume circuits of the R454C low pollutant refrigerant utilised in this range of machines which delivers highly efficient heating with a low GWP of 148, as well as cascading vapour injection scroll driven inverter compressors enabling effective and smooth load matching. The V frame format ensures the smallest possible unit footprint whilst also maximising incoming air flow for high output and efficiency. The units are capable of generating up to 70°C outlet flow temperature and can be used to generate useful space heating or as a source for DHW provision. The control system allows the unit to be operated in a cascade of up to 16 machines.

All the machines are supplied with low noise set-up as standard with an integrated fully modulating circulating pump and a loose supplied degassing valve to safeguard against hydraulic contamination.

Heat energy from the ambient air is obtained from the R454C refrigerant circulating inside a bank of copper and aluminium fins and then this energy is passed, after the compression cycle, to the heating circuit through a stainless steel brazed heat exchanger. The circuit is controlled by the standard supplied temperature probes and pressure transducers and is protected by high and low pressure switches. The plate heat exchanger and all hydraulic pipework is thermally insulated to avoid condensation and avoid heat loss. The S-ASX-OPVi units are fully reversible and can operate in cooling mode in the summer months. Full EER data is available on request.

Please visit our website for further information on our products and services

www.strebel.co.uk

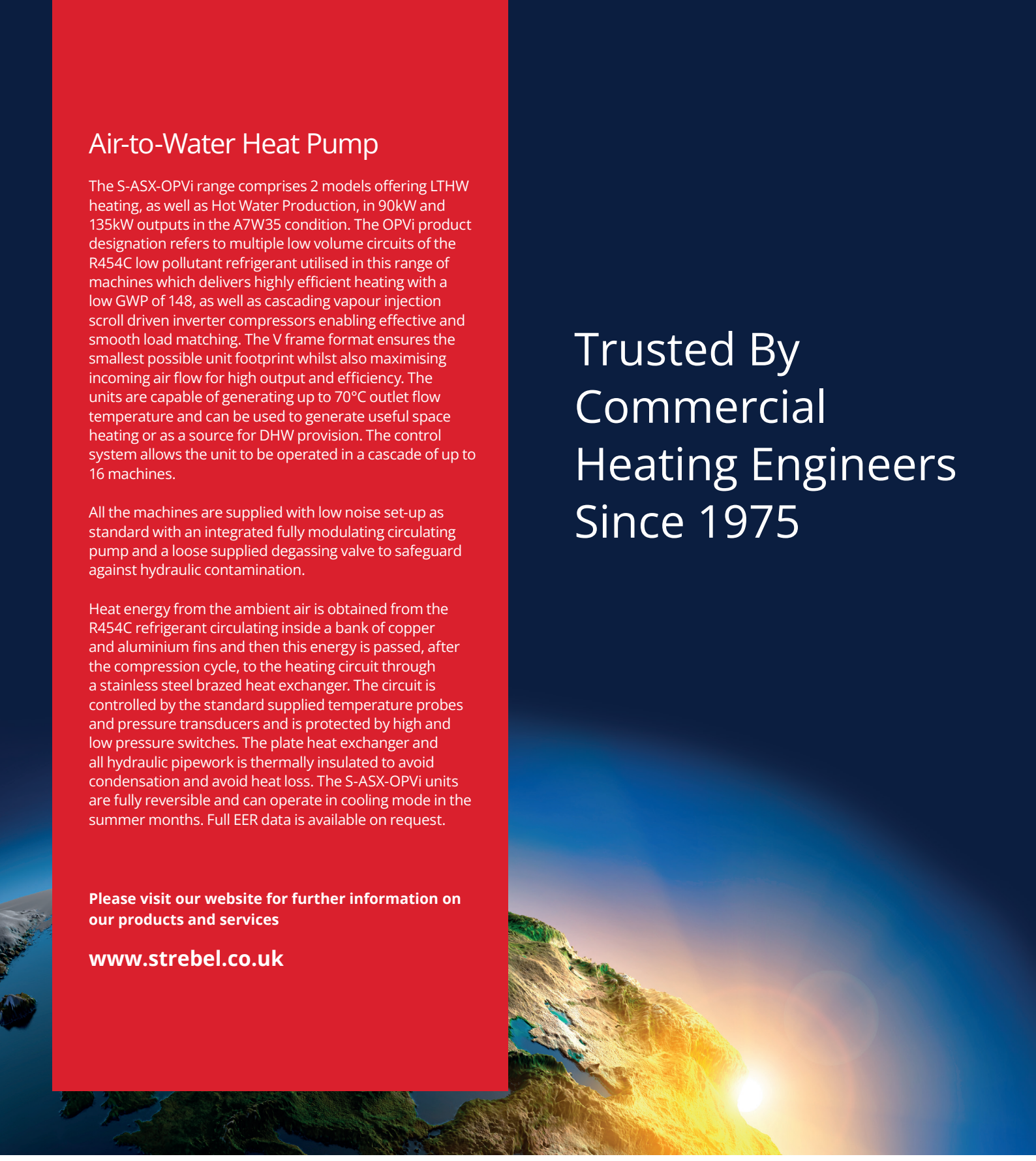

Low Pollutant Refrigerant

R454C refrigerant is a blend of 21.5% R32 and 78.5% R-1234yf with a GWP of 148. It is classed as A2L, mildly flammable, and, as such the S-ASX-OPVi unit is fitted with leak detection equipment.

Embodied carbon, calculated using the CIBSE TM65 'mid-level' method, is a measure of the total carbon footprint of a device including elements of material components, manufacturing, transport as well as 'after-use' disposal. All S-ASX-OPVi units benefit from relatively low tonnage of embodied carbon due to the low GWP of R454C refrigerant. Full information is available in the Technical section online

Embodied TM65 Carbon

S-ASX-OPVi Technical Data

Model		90	135
Power supply	V-p-Hz	400 - 3 - 50	
Compressor type		Vapour injection scroll driven inverter	
Compressor Modulation	%	35-100	
No. Compressors	Qty	2	3
No. refrigerant circuits		2	3
Refrigerant		R454C	
Plant heat exchanger type		Stainless steel brazed plates	
Source heat exchanger		Finned coil copper hydrophilic aluminium	
Fans		axial EC	
No. Fans	Qty	2	3
Hydraulic fittings		2"	2 1/2"
Weight	kg	1050	1600
Electrical Power supply	Amps	83	129
Low Noise Acoustic Setting (as standard)			
Sound power level	dB(A)	80	82
Sound pressure at 1 metre	dB(A)	61	63
Sound pressure at 5 metres	dB(A)	53	55
Sound pressure at 10 metres	dB(A)	48	50

Unit Dimensions

		90	135
L	mm	2260	3330
B	mm	1190	1190
H	mm	2450	2450
X1	mm	1000	1000
X2	mm	1000	1000
Y1	mm	1000	1000
Y2	mm	1000	1000

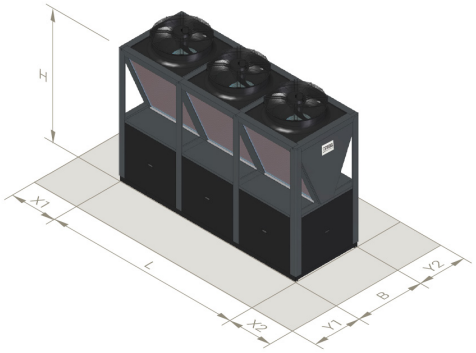

Clearance distances shown are as per safety zoning requirements for use with R454C refrigerant, classified as A2L mildly flammable. For specific project layout drawings contact Strebel Technical Department.

The acoustic data performances are referred to units operating in heating mode at nominal conditions A7W35.
The sound power level is measured in accordance to ISO 3744 standard.
The sound pressure level is calculated according to ISO 3744 and is referred to a distance of 1/5/10 metres form the external surface of the unit.

Operating Range

The graph to the right shows the operating range araea inside which the correct working of the unit is guaranteed.

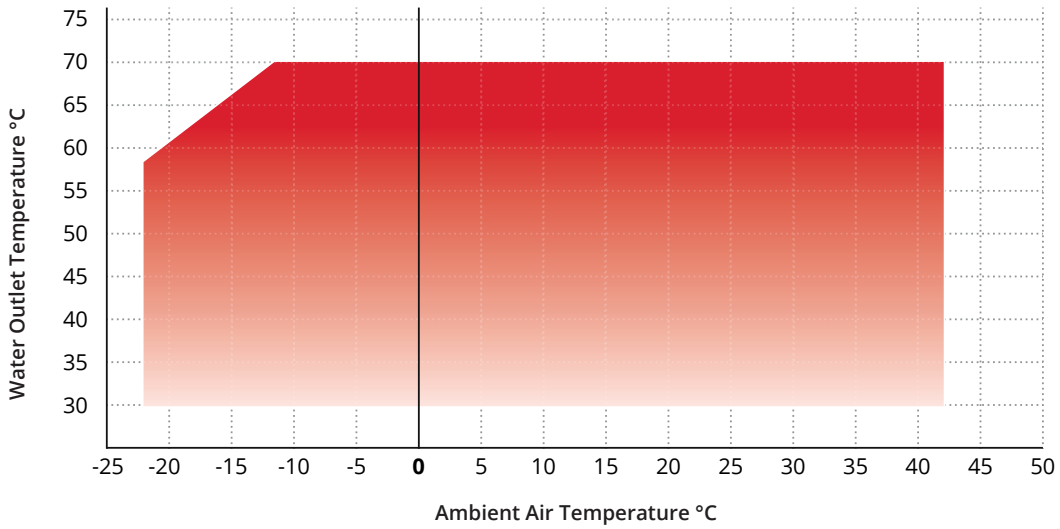

Multiple Unit Cascading

The S-ASX-OPVi units are available to be installed in cascade format of up to 16 machines. Quotations for cascade kits are available upon request during the design phase (but are not included as standard without specific quotation request). Detail on layouts are available from Strebel Technical Department. The connection kits comprise pre-assembled insulated stainless-steel manifolds with grooved connections, butterfly isolation valves, "Y" filter, and deaerator filters as well as insulated pipework lengths as appropriate to the number of units to be cascaded together. The connection kits supplied are provided for installation by others. As such a maximum of 2.16MW output can be achieved with a cascade of 16 of the S-ASX-OPVi135 units.

Cascades can be arranged either in a linear 'coil facing coil' format or an 'end to end' format as shown. Depending on which is preferred the associated cascade kits will be offered during the detailed design phase.



Cascaded 'coil facing coil' installation with four units of S-ASX-OPVi135 with pre-assembled cascade connection kits.

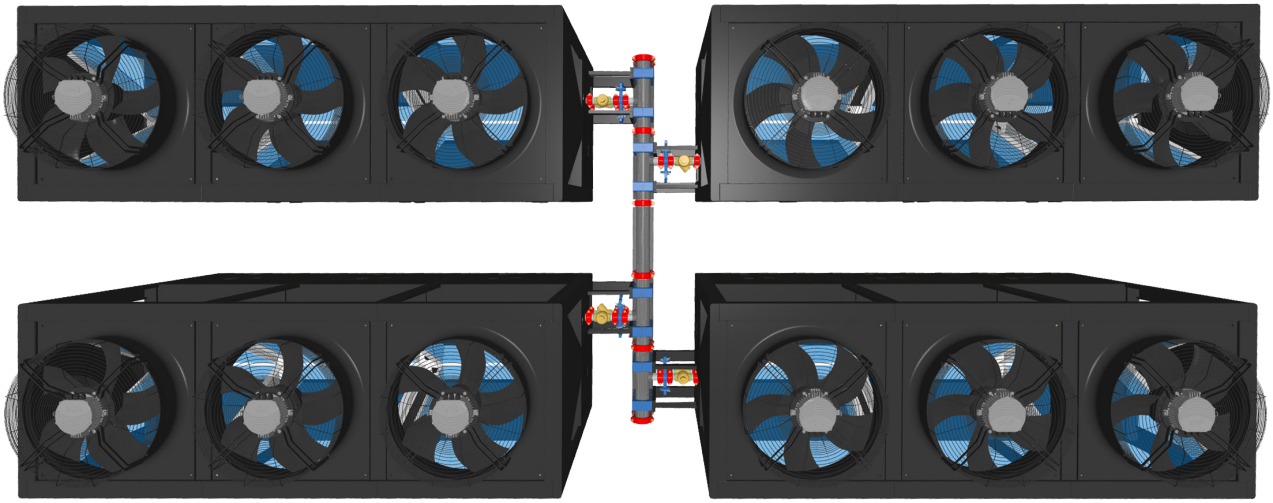

Cascaded 'end to end' installation with four units of S-ASX-OPVi135 with pre-assembled cascade connection kits.

Cascade Output Data

		90			135		
		Nominal Output			Nominal Output		
Units		Two	Three	Four	Two	Three	Four
A7W45	kW	178	267	356	268	402	536
A2W45	kW	150	225	300	226	339	452
A-4W45	kW	136	204	272	206	309	412

Strebel S-ASX-OPVi Technical Specifications

Model			90			135		
Efficiency label at 35°C			A+			A+		
Efficiency label at 55°C			A+			A+		
SCOP at 35°C			3.63			3.63		
SCOP at 45°C			3.15			3.15		
SCOP at 55°C			2.95			2.95		
SCOP at 65°C			2.65			2.65		
			Min	Nominal	Max	Min	Nominal	Max
A7W35	Heating capacity	kW	43.4	88.1	110	65.0	132	164
	Power input	kW	10.0	21.9	32.4	15.1	32.9	48.5
	COP		**4.34**	**4.02**	**3.40**	**4.30**	**4.01**	**3.38**
A7W45	Heating capacity	kW	43.9	89.2	111	65.8	134	166
	Power input	kW	12.5	27.3	40.3	18.8	40.9	60.4
	COP		**3.51**	**3.27**	**2.75**	**3.50**	**3.28**	**2.75**
A7W55	Heating capacity	kW	44.6	90.6	113	67.0	136	169
	Power input	kW	15.1	32.8	48.4	22.6	49.2	72.6
	COP		**2.95**	**2.76**	**2.33**	**2.96**	**2.76**	**2.33**
A7W65	Heating capacity	kW	45.7	92.7	115	68.5	139	173
	Power input	kW	18.6	40.5	59.8	28.0	60.7	89.6
	COP		**2.46**	**2.29**	**1.92**	**2.45**	**2.29**	**1.93**
A2W35	Heating capacity	kW	36.6	74.3	92.3	54.9	111	138
	Power input	kW	10.1	22.0	32.4	15.1	32.9	48.6
	COP		**3.62**	**3.38**	**2.85**	**3.64**	**3.37**	**2.84**
A2W45	Heating capacity	kW	37.2	75.5	93.8	55.7	113	141
	Power input	kW	12.6	27.4	40.4	18.8	41.0	60.5
	COP		**2.95**	**2.76**	**2.32**	**2.96**	**2.76**	**2.33**
A2W55	Heating capacity	kW	38.0	77.1	95.8	57.0	116	144
	Power input	kW	15.1	32.9	48.5	22.7	49.3	72.7
	COP		**2.52**	**2.34**	**1.98**	**2.51**	**2.35**	**1.98**
A2W65	Heating capacity	kW	39.1	79.3	98.5	58.6	119	148
	Power input	kW	18.7	40.6	59.9	28.0	60.9	89.8
	COP		**2.09**	**1.95**	**1.64**	**2.09**	**1.95**	**1.65**
A-4W35	Heating capacity	kW	33.2	67.4	83.8	49.8	101	126
	Power input	kW	10.1	22.0	32.5	15.2	33.0	48.7
	COP		**3.29**	**3.06**	**2.58**	**3.28**	**3.06**	**2.59**
A-4W45	Heating capacity	kW	33.9	68.8	85.5	50.8	103	128
	Power input	kW	12.6	27.4	40.5	18.9	41.1	60.7
	COP		**2.69**	**2.51**	**2.11**	**2.69**	**2.51**	**2.11**
A-4W55	Heating capacity	kW	34.8	70.6	87.8	52.2	106	132
	Power input	kW	15.2	32.9	48.6	22.7	49.4	72.9
	COP		**2.29**	**2.15**	**1.81**	**2.30**	**2.15**	**1.81**
A-4W65	Heating capacity	kW	36.0	73.1	90.8	54.0	110	136
	Power input	kW	18.7	40.6	60.0	28.1	61.0	90.0
	COP		**1.93**	**1.80**	**1.51**	**1.92**	**1.80**	**1.51**

Sizing Guidance

When sizing it is imperative to base selection using the highlighted nominal machine output at the design condition. The minimum and maximum outputs are shown only for information purposes to demonstrate the operational output envelope limits. For clarity using maximum output as the basis for selection is not considered sound engineering practice, and will negatively impact operational effectiveness and longevity.

Technical Specification performances based on Delta T of 5°C for W35,45,55 and Delta T of 10°C for W65.

Seven Reasons to Use Strebel

We are proud of our history and the disciplines instilled in the company by our founder Josef Strebel.

It's the Strebel way - uncompromising product quality and customer care.

SAFETY	**At the heart of everything we do**
TRUSTED	**By engineers since 1893**
ROBUST	**High quality components**
EASE	**Of installation**
BEST	**Practice throughout design, manufacturing and installation**
ENGINEERED	**For long trouble free product life**
LOGICAL	**Sophisticated control software**

Services and Warranty

Installation, Service and Spares

All heat pumps should be installed in accordance with the relevant installation instructions by experienced engineers. Extended warranties are available on request to a maximum of an additional five years. Upon request Strebel Service engineers can verify heat pump installation at time of commissioning but will not carry out wiring, or make changes to incorrect wiring, between heat pump and storage vessel as this is the responsibility of the installer.

Our Service Department offers a range of servicing options that can be tailored to meet individual requirements. Please contact us for more information.

Availability of Spares to the right specification at the right time is essential to the successful operation of any plant room item. At our central Warehouse facility we stock a wide range of commonly used parts which can be dispatched directly to site for the following day assuming the order is received the morning before.



Warranty

All Strebel heat pumps are offered with the standard 2-year warranty on the main units. The date of the warranty will be considered to run from the time the heat pump is commissioned on site.

2 YEAR WARRANTY



Customer Support

As with all Strebel products, the S-ASX-VP heat pump range is fully supported by our excellent customer service team and experienced technical engineers. Whether you are looking for product advice or for maintenance and repair, our service team are on hand to support you and can be contacted easily via telephone or online.

+44 (0) 1276 685 422 info@strebel.co.uk

STREBEL HEATING TECHNOLOGY

Strebel Ltd Unit 10, Invincible Road,
Farnborough, Hampshire, GU14 7QU
Tel: +44 (0) 1276 685 422 | **Email:** info@strebel.co.uk | **www.strebel.co.uk**

CLEAN HEATING NATURALLY STREBEL