STREBEL
S-CB PX 120 Boiler

Wall Hung High Efficiency Condensing Boiler

Installation, Operating & Maintenance Manual

H_2 20%

Please read and understand before commencing installation and leave the manual with the customer for future reference.

STREBEL HEATING TECHNOLOGY

2022-07-01 v1

TABLE OF CONTENTS

INTRODUCTION.....5

1. SAFETY GUIDELINES.....6

2. TECHNICAL DATA OF THE STREBEL S-CB PX 120.....7
2.1. FUNCTIONAL INTRODUCTION.....7
2.2. TECHNICAL SPECIFICATIONS DATASHEET.....8
2.3. ERP SPECIFICATIONS DATASHEET.....10

3. DIMENSIONS.....11

4. ACCESSORIES AND UNPACKING.....12
4.1. ACCESSORIES.....12
4.2. UNPACKING.....12

5. INSTALLATION OF THE STREBEL S-CB PX 120.....13
5.1. GENERAL NOTES.....13
5.2. MOUNTING THE BOILER.....14

6. CONNECTIONS WATER SIDE.....15
6.1. BOILER CONNECTIONS.....15
6.1.1. Mounting.....15
6.1.2. Gas connection.....15
6.2. CONDENSATE DRAIN CONNECTION.....16
6.3. FLOW AND RETURN CONNECTIONS.....16
6.4. THE EXPANSION VESSEL.....17
6.5. PRESSURE RELIEF VALVE.....17
6.6. BYPASS.....17
6.7. PUMP FUNCTIONALITY.....17
6.8. FROST PROTECTION.....17
6.9. INSTALLING A STRAINER AND/OR DIRT SEPARATOR.....18
6.10. WATER QUALITY.....18
6.11. PLASTIC PIPING IN THE HEATING SYSTEM.....19
6.12. AUTOMATIC AIR VENT.....19
6.13. AUTOMATIC WATER FILLING SYSTEMS.....19
6.14. WATER PRESSURE.....20
6.15. CHEMICAL WATER TREATMENT.....20
6.16. UNDER FLOOR HEATING.....20
6.17. FLUSH THE SYSTEM WITH FRESH WATER.....20
6.18. INSTALLATION EXAMPLES.....21
6.18.1. Example of a normal single boiler heating circuit (preferable).....21
6.18.2. Example of a multiple boiler heating circuit.....21

7. HYDRAULIC GRAPH BOILER RESISTANCE (mWC).....22
7.1. HIGH EFFICIENCY PUMP.....22
7.2. PUMPS: ELECTRICAL POWER LIMITS.....23
7.3. PUMP INSTALLATION.....23

8. FLUE GAS DISCHARGE AND AIR SUPPLY SYSTEM.....24
8.1. GENERAL.....24
8.2. C63 CERTIFIED.....24
8.3. FLUE TERMINAL.....25
8.3.1. Horizontal Flue Terminal Positioning.....25
8.3.2. Vertical Flue Terminal Positioning.....25
8.3.3. Common Flue / Ducts.....25
8.4. AIR SUPPLY.....25
8.4.1. Combustion air quality.....25
8.4.2. Air supply through humid areas.....25
8.5. PIPE HEIGHTS ON A FLAT ROOF.....26
8.6. MINIMUM TERMINAL DISTANCE ON HORIZONTAL TERMINATIONS – TYPE C FLUES ONLY.....27
8.7. HORIZONTAL FLUE RUN RISK ASSESSMENT.....27
8.7.1. Figure 12 – line G.....28
8.7.2. Figure 7 – line Y.....28
8.8. OTHER FLUE TERMINAL MINIMUM DISTANCES.....28
8.9. FLUE GAS OUTLET & COMBUSTION AIR INLET CALCULATION EXAMPLES.....29
8.10. SIX TYPICAL EXAMPLES.....30

8.10.1. Example A: Twin pipe system (C63) ... 30
8.10.2. Example B: Twin pipe system with concentric roof terminal (C33) ... 30
8.10.3. Example C: Single flue gas outlet. Air supply from boiler room ... 32
8.10.4. Example D: Concentric flue gas/air supply pipe (roof-mounted) ... 33
8.10.5. Example E: Concentric system Wall outlet C13(wall-mounted) ... 33
8.10.6. Example F: Separate air supply duct & flue duct in different pressure zone (C53) ... 35

9. ELECTRICAL INSTALLATION ... 36
9.1. GENERAL ... 36
9.2. ELECTRICAL CONNECTIONS ... 36
9.3. FUNCTIONS OF THE CONNECTIONS ... 36
9.4. ELECTRICAL SCHEMATICS ... 38
9.5. SENSOR VALUES AND CONVERSION TABLES ... 40

10. USER INTERFACE ... 41
10.1. CONTROL PANEL / DISPLAY UNIT ... 41
10.2. CONTROL PANEL MENU STRUCTURE ... 42
10.3. DISPLAY DURING OPERATION ... 44
10.4. MONITOR SCREENS ... 45
10.5. SERVICE FUNCTION ... 47
10.6. SCHORNSTEINFEGER FUNCTION ... 48
10.7. PROGRAMMING IN STANDBY MODE ... 49
10.8. SETTING THE TIME & DATE ... 49
10.9. SET POINTS ... 50
10.10. SETTING THE TIMER PROGRAMS ... 51
10.11. SETTING THE OUTDOOR SPECIFICATIONS ... 54
10.12. CHECKING THE OPERATING HISTORY ... 58
10.13. CHECKING THE FAULT HISTORY ... 59
10.14. SETTING THE MAINTENANCE SPECIFICATIONS ... 60
10.15. SETTING THE USER LOCK ... 63
10.16. SETTING THE PARAMETERS WITH THE DISPLAY MENU ... 64
10.17. FAULT CODES DISPLAY ... 71
10.17.1. Lock-out codes ... 71
10.17.2. Blocking codes ... 72
10.17.3. Maintenance attention messages ... 73

11. CONTROLLING OPTIONS AND SETTINGS ... 74
11.1. GENERAL ... 74
11.1.1. Extra boiler control ... 74
11.1.2. Max cooling time ... 74
11.1.3. Temperature display on/off ... 74
11.1.4. Water pressure ... 74
11.1.5. Gas type selection ... 74
11.1.6. Soft start option ... 75
11.1.7. Pump mode (EC technology) ... 75
HEATING ... 76
11.1.8. Controlling behaviour settings ... 76
11.1.9. Room thermostat on/off ... 77
11.1.10. Room thermostat OPEN THERM ... 77
11.1.11. Outdoor temperature related flow control ... 77
11.1.12. 0-10 Vdc Remote flow temperature set point ... 77
11.1.13. 0-10 Vdc Remote burner input control ... 78
11.1.14. Timer contact function ... 78
11.2. INDIRECT HOT WATER / CALORIFIER ... 79
11.2.1. Pump and 3-way valve control ... 79
11.2.2. Tank thermostat ... 79
11.2.3. Tank sensor ... 79
11.2.4. Low/high flow temperature to tank coil ... 80
11.2.5. Heating and hot water switching time ... 81
11.2.6. Heating and hot water switching at sudden temperature drop ... 81
11.2.7. Anti-Legionnaires' disease function (pasteurisation) ... 82
11.3. CASCADE CONTROL ... 83
11.3.1. Parameter settings for cascaded boilers ... 83
11.3.2. Monitor screens ... 85
11.3.3. Output control and boiler sequence ... 85

12. COMMISSIONING THE BOILER 86
12.1. FIRST: FLUSHING THE BOILER WITH WATER 86
12.2. SECOND: FILLING & VENTING THE BOILER AND THE SYSTEM 86
12.3. THIRD: CHECK THE WATER FLOW 86

13. STARTING THE BOILER 88
13.1. GENERAL 88
13.2. FIRING FOR THE FIRST TIME 88

14. ADJUSTING AND SETTING THE BURNER 89
14.1. INTRODUCTION 89
14.1.1. Adjustment tables 89
14.1.2. Adjustment values 90
14.1.3. Setting screws gas valve: drawing 91
14.1.4. Adjustment actions: general scheme 92
14.2. ADJUSTING IN CASE OF A NEW BOILER, OR AFTER MAINTENANCE (CASE A) 93
14.2.1. General remark 93
14.2.2. Checking and adjusting at maximum load 93
14.2.3. Checking and adjusting at minimum load 93
14.3. ADJUSTING IN CASE OF VALVE REPLACEMENT OR GAS CONVERSION (CASE B) 93
14.3.1. General remarks 93
14.3.2. Checking and adjusting at maximum load 93
14.3.3. Checking and adjusting at minimum load 93
14.4. ADJUSTING PROCEDURES 93
14.5. GAS CONVERSION PROPANE OR B/P 95

15. PUTTING THE BOILER OUT OF OPERATION 97
15.1. OUT OF OPERATION: ON/OFF FUNCTION 97
15.2. OUT OF OPERATION: POWER OFF 97

16. FAULT CODES AND BLOCKING CODES 98
16.1. FAULT CODES 98
16.2. BLOCKING CODES 103
16.3. MAINTENANCE REMINDER FUNCTION 107

17. MAINTENANCE 108
17.1. GENERAL 108
17.2. ANNUAL INSPECTION & MAINTENANCE 108

18. USER INSTRUCTIONS 111

INSTALLATION EXAMPLES 112

19. Strebel S-CB PX 120 116
19.1. SPARE PARTS EXPLODED VIEW AND PART NUMBERS 116

INTRODUCTION

This manual is written for:
- The Installer.
- The System Design Engineer.
- The Service Engineer.
- The User.

The following symbol is used in this manual:

⚠ Warning: Important information concerning the safety of persons and/or the appliance.

Strebel Ltd is not accountable for any damage caused by incorrect following the mounting instructions.
For service and repair purposes use only original Strebel spare parts.

All documentation produced by the manufacturer is subject to copyright law.

1. SAFETY GUIDELINES

Carefully read all the instructions before commencing installation.
Keep these instructions near the boiler for quick reference.

The appliance should be installed by a skilled installer such as GAS SAFE registered person, electrical work carried out by a qualified person, all according to national and regional standards.

Failure to comply with these regulations could deem the warranty invalid. This appliance must be installed in accordance with the rules that apply and only be used in an adequately ventilated space conforming to standards in place.

Without written approval of the manufacturer the internals of the boiler may not be changed. When changes are executed without approval, the boiler certification becomes invalid.

Commissioning, maintenance and repair must be done by a skilled installer/engineer, according to all applicable standards and regulations.

⚠ What to do if you smell gas:

- Don't use any electrical equipment.
- Don't press any switches.
- Close the gas supply.
- Ventilate the room (open the windows and/or outside boiler room doors).
- Immediately warn the installer.

⚠ The manufacturer / supplier is not liable for any damage caused by inaccurately following these mounting instructions. Only original parts may be used when carrying out any repair or service work.

⚠ This appliance is not intended for use by persons (including children) with reduced physical, sensory or mental capabilities, or lack of experience and knowledge, unless they have been given supervision or instruction concerning use of the appliance by a person responsible for their safety. Children should be supervised to ensure that they do not play with the appliance.

2. TECHNICAL DATA OF THE STREBEL S-CB PX 120

2.1. Functional introduction

The S-CB PX 120 boilers are central heating boilers with a maximum high efficiency. Such a performance can be reached by, amongst other things, using a special heat exchanger made of stainless steel. The heat exchanger allows the flue gases to cool down below the condensation point, releasing extra heat. This immediately improves the efficiency considerably.

The S-CB PX 120 boiler is standard set for Natural Gas G20

Gases used must meet the European standard EN 437.
Fuel used should have sulphur rates according to the European standard, a maximum annual peak over a short period of time of 150 mg/m^3 and an annual average of 30 mg/m^3.

Boiler control includes:
- Cascade control for up to twelve boilers.
- Remote operation and heat demand indication from each boiler.
- Weather compensation control.
- Calorifier control.

Connections for:
- Boiler pump.
- 0-10 VDC remote flow temperature (set point) control.
- 0-10 VDC remote burner input control.
- Outdoor temperature sensor.
- External calorifier pump or diverter valve.

Cascade control
When using the integrated cascade control, a maximum of twelve boilers can be controlled in a cascade configuration. By the use of an appropriate external control, this number may be increased at will.

0-10 VDC connection available
The boiler flow temperature or power input can be controlled by an external 0-10 VDC signal. When a number of boilers are cascaded, the signal should be directed to the master boiler only. A signal of 1,48 Volt will switch on the boiler(s), less than 1,4 Volt will switch off the boiler(s).

Time program
For both central heating and hot water function of the boiler, time programs with three programmable periods per day are available. These time programs are set and activated by entering the desired settings directly at the boiler control panel.

2.2. *Technical specifications datasheet*

GENERAL		
Product Identification Number	-	CE 0063 BP3254
Classification	-	UK II2H3B/P
Gas Appliance Type	-	**B23, B23P; C13, C33, C43, C53, C63, C83**
Type boiler	-	**Strebel S-CB PX 120**
Water content est.	Litre	8,3
Weight (empty)	kg	78
Dimensions (h x w x d)	mm	842 x 476 x 486
Flow/return connection (boiler)	inch	R 1"
Gas connection	inch	R ¾"
Parallel connection	mm	Ø 100-100

CENTRAL HEATING [EN437]		**Values min-max:**
Nominal input (Net)	kW	26,0 - 111
Nominal input (Hs) (G20 G25)	kW	28,9 - 123
Nominal input (Hs) (G31) [1]	kW	28,3 - 121
Nominal input (Hs) (G30) [1]	kW	34,7 - 120
Nom. output 80/60	kW	24,7 - 106
Nom. output 50/30	kW	27,2 - 116
Nom. output 37/30	kW	28,1 - 120
Efficiency 40/30ºC DIN 4702-8	%	up to 110,6 %

GAS CONSUMPTION [EN437]			**Values min-max:**
Natural gas G25.3		m^3_{st}/h	3,13 - 13,7
Natural gas G20		m^3_{st}/h	2,75 - 11,8
Propane gas G31 [1]		m^3_{st}/h	1,06 - 4,54
Butane/Propane (B/P) G30/G31 [1]		m^3_{st}/h	0,99 - 3,44
Supply pressure nom. [2]	G25.3	mbar	25
	G20	mbar	20
	G31 [1]	mbar	30/37
	G30/G31 [1]	mbar	50

NOTES

[1] When using propane or butane, a special air restrictor kit is needed. See accessories list on page 12 and instruction at page 95.

[2] Below a table is given in which the min. and max. gas supply pressures are mentioned according to EN437

	p nominal [mbar]	p min [mbar]	p max [mbar]
G25.3	25	20	30
G20	20	17	25
G31	30 37	25 25	35 45
G30/G31	50	43	57

EMISSION [EN437]			**Nominal values at min-max load:**
CO_2 flue gas [3]	G20/G25.3	%	8,7 - 9,0
	G31 [1]	%	9,3 - 10,3
	G30/G31 B/P)[1]	%	9,3 - 10,4
NOx class [EN15502-1]		-	6
Flue gas temperature at combustion air temperature = 20°C		°C	≈ 85-95
Mass flow flue gas [min-max] $Q_{fluegas}$ condensing		g/s	11,6 - 57,7
Available pressure for the flue system [4]		Pa	160

INSTALLATION			
Max. flow temperature		°C	90
Available pressure for the installation at	ΔT = 20 K	mWC	3,1
	ΔT = 25 K	mWC	6,1
Pressure CH-system min./max. [5]		bar	1-4

ELECTRIC		
Power supply	V / Hz	230 / 50
Power consumption	W	150
Protection class	-	IPX4D

NOTES

[3] CO_2 of the unit measured/set without the boiler front panel in place

[4] Maximum allowed combined resistance of flue gas and air supply piping at high fire

[5] When the built-in water pressure sensor is replaced by a water pressure switch, water pressure may go up to 6,0 bar

2.3. ErP specifications datasheet

Technical parameters according the European ERP (Energy Related Products) legislation:

Type Boiler:		**S-CB PX 120**
Condensing boiler:		Yes
low temperature boiler:		Yes
B11 boiler:		No
Cogeneration space heater:		No
Combination heater:		No
	Unit:	Value
Rated heat output	**kW**	107,7
P-rated (P4) at 60-80^{0}C	kW	107,7
Heat output (p1) 30% at 30-37^{0}C	kW	36,0
Seasonal space heating energy efficiency (ηs).	%	**92,7**
energy efficiency (η4) at 60-80^{0}C	%	87,4
energy efficiency (η1) at 30-37^{0}C	%	97,5
Auxiliary electricity consumption		
At full load (elmax).	kW	0,152
At part load (elmin)	kW	0,027
In standby mode (Psb)	kW	0,004
Other		
Standby heat loss (Pstby)	kW	0,076
Ignition burner power consumption (P_{ign})	kW	0,000
Emissions (Nox) of nitrogen oxides (EN15502-1:2012+A1:2015)	mg/kWh	39.2
Sound power level, indoors (EN 15036-1:2006)	dB	63

3. DIMENSIONS

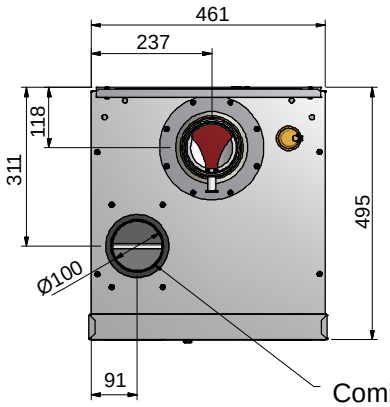

Combustion air inlet connection
(hole with sealing ring and pipe support bracket)

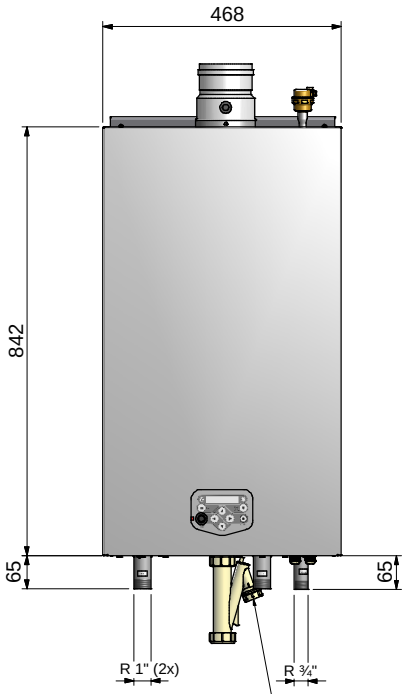

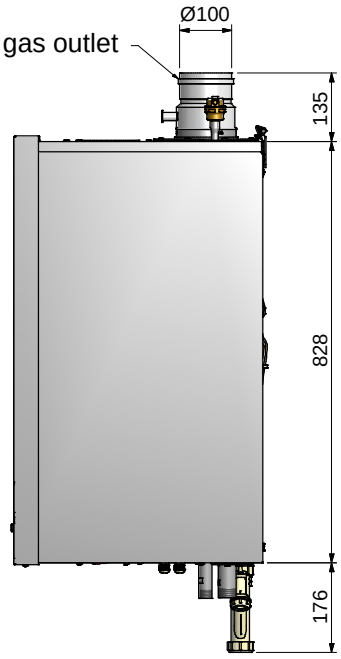

Condensate discharge.
Flexible hose Ø25/21 x 800 mm

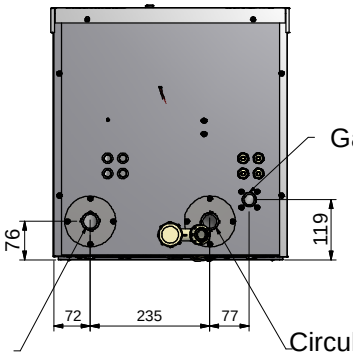

Gas supply connection

Circulation return connection
(Circulation pump side)

Circulation flow connection

4. ACCESSORIES AND UNPACKING

4.1. Accessories

Depending on the selected controlling behaviour for the central heating system and/or the optional use of a calorifier, the following items can be supplied with the boiler. Ask your supplier for the specifications.

Item	Part no.
Outdoor (air) temperature sensor: 12kOhm@25°C (Connect to the boiler connectors).	E04.016.585
External flow temperature sensor for system side of the low loss header: 10kOhm@25°C (to be mounted to the boiler connections).	E400376
Calorifier temperature sensor: 10kOhm@25°C (Connect to the boiler connectors)	E400277
Flue Conversion Kit from Twin Pipe to Concentric (100-100 → 100/150)	E400132
Software + interface cable for programming the boiler with a computer (laptop)	E400278
LPG Conversion Kit	E400131
Pump UPMXL 25-125 130 PWM (Main cable, signal cable with cable gland, and pump gaskets included)	E400157

4.2. Unpacking

The Strebel S-CB PX 120 boiler will be supplied with the following documents and accessories:

- One “Unpacking instructions” document.
- One “Mounting, user and service instructions” manual.
- One suspension bracket.
- Siphon with condensate discharge hose.
- One spare fuse and two burner door spare nuts, attached to the front of the gas valve.

After delivery, always check the boiler package to see if it is complete and without any defects. Report any imperfections immediately to your supplier.

5. INSTALLATION OF THE STREBEL S-CB PX 120

5.1. General notes

At both sides of the boiler at least 50 mm of clearance should be applied to walls or wall units, 350 mm above the top side of the boiler and enough distance from the bottom side of the boiler, so that the pump can be mounted here.

The installation area/room must have the following provisions:

- 230 V - 50 Hz power source socket with earth connection.
- Open connection to the sewer system for draining condensing water.
- A sound-deadening wall.
- The wall used for mounting the boiler must be able to hold the weight of the boiler.

Other considerations related to the boiler location.

- The ventilation of the boiler room must meet all applicable standards and regulations, regardless of the selected supply of fresh air to the boiler location.
- Both the air supply and the flue gas tubes must be connected to the outside wall and/or the outside roof.
- The installation area must be dry and frost-free.
- The boiler has a built-in fan that will generate noise, depending on the total heat demand. The boiler location should minimise any disturbance this might cause. Preferably mount the boiler on a brick wall.
- There must be sufficient lighting available in the boiler room to work safely on the boiler.
- <u>When a boiler is positioned at the highest point of the installation, the supply and return pipes must first protrude 0.5 m above the top of the boiler, before these pipes go to the installation side. In other words, the water level must always be 0.5 meter above the top of the boiler and an automatic air vent must be installed in the supply or return pipe. A low-water level protection should also be installed at the installation side.</u>
- Notice the positioning of electrical components in relation to the temperature sensitivity.
- Make sure there is an <u>open</u> connection with the sewer to drain the condensate. This connection should be lower than the condensate drain level of the boiler:

The boiler must be positioned and installed by a skilled installer in accordance with all applicable standards and regulations. Commissioning the boiler must be done by a skilled service/commissioning engineer, who is trained for this type of boiler.

5.2. *Mounting the boiler*

Before mounting and installing the boiler the following connections should be considered:

- Flue gas system and the flue gas pipe connections
- Air supply system and connections
- Flow and return pipe connection and pump position
- Condensate and pressure relief valve drainage
- Power supply (preferably the power connection positioned above the boiler)

All lines/piping must be mounted free of tension. The weight of all the installation components should be supported separately from the boiler so there will be no standing force on the connections.

→ Pay attention to this while choosing the mounting position of the boiler.

Determine the position of the flow and return pipes by using the included suspension bracket or a suspension frame (when supplied).
While marking the holes, ensure that the suspension bracket or frame is perpendicular and the boiler does not lean forward. If necessary, adjust the position with the adjusting bolts at the lower rear side of the back panel (see drawing).

When the adjusting bolts aren't sufficient, fill the gap behind the bolts to get the boiler in position. The exact boiler position lies between the boiler hanging level and hanging slightly backwards. The boiler should not lean forward in the mounted position.

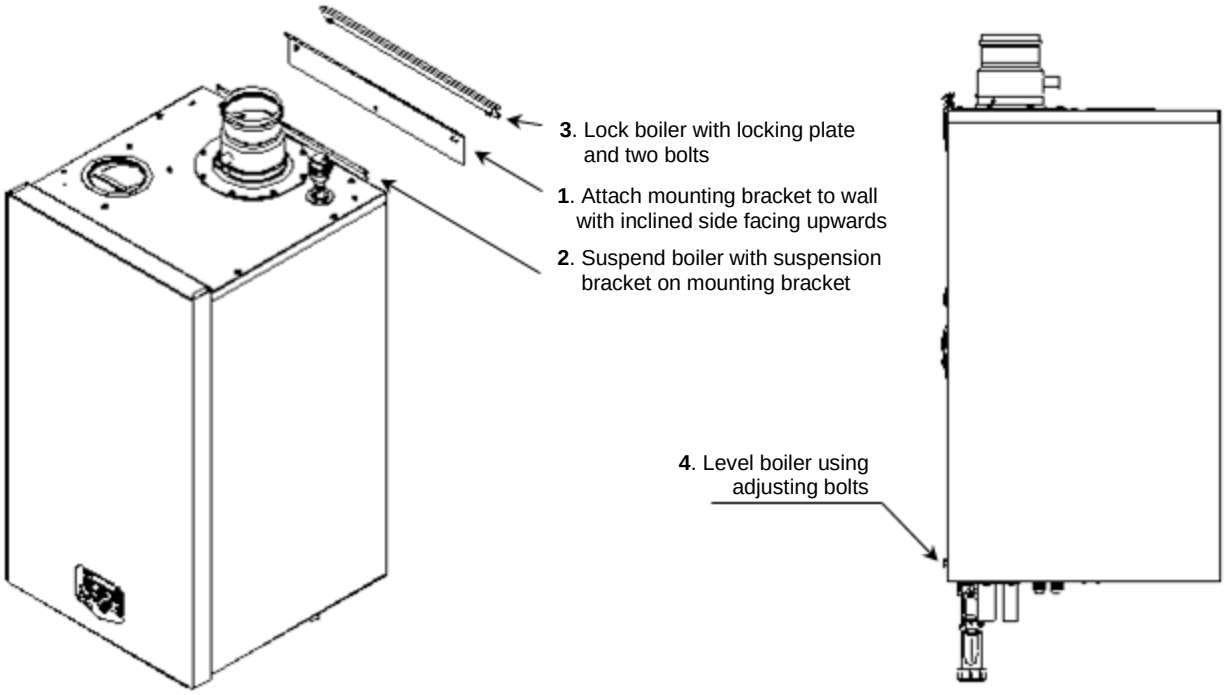

Boiler suspension

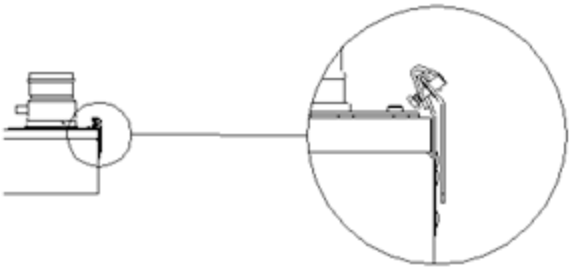

Detail boiler suspension

6. CONNECTIONS WATER SIDE.

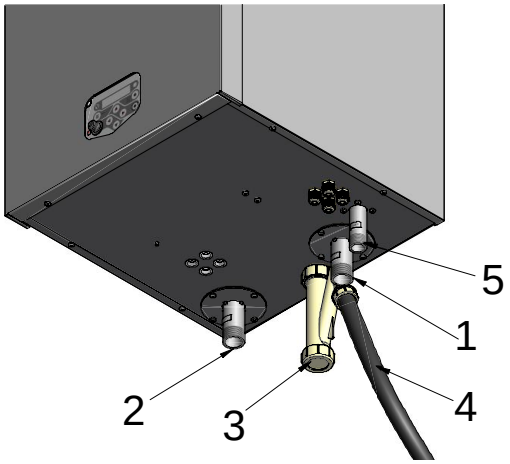

6.1. Boiler connections

1 - Return CH

2 - Flow CH

3 - Siphon cleaning point

4 - Condensate drain

5 - Gas

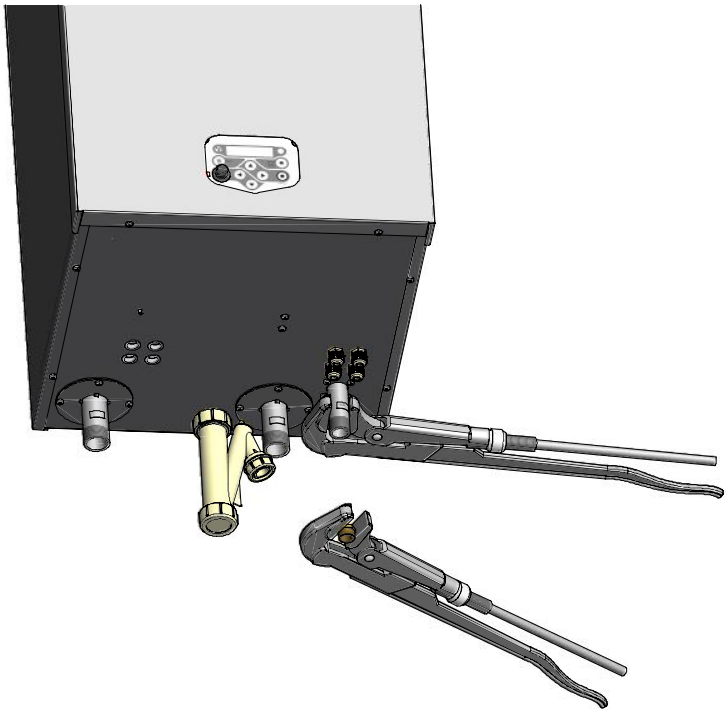

6.1.1. MOUNTING

When mounting the connections, always make sure that no extra tension, forces and/or torques are applied to the connecting pipes and/or the boiler and the boiler suspension. Keep the connections fixed in place, as shown in the picture, by using two wrenches.

6.1.2. GAS CONNECTION

Always install a manual shutter valve in the gas supply line, directly underneath the boiler.
NOTICE: This valve is NOT delivered with the boiler.

6.2. Condensate drain connection

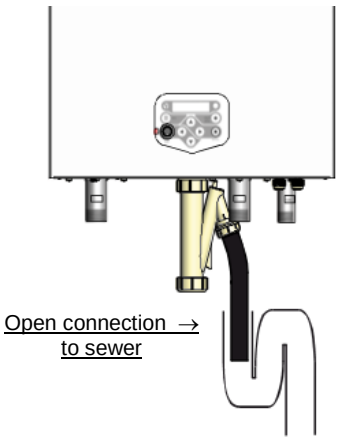

The condensate drain has a 19mm flexible discharge hose. The siphon must always be filled with water. As a safety measure, the siphon has been provided with a floating ball, which closes the outlet in case of water absence, preventing large flue gas leakage.

Use only condensate resistant materials for the external condensate drainage system. Blockage of this drain might damage the boiler. The drain connection is correct when the condensate can be seen flowing away, e.g. using a funnel. Any damage that might occur, when the drain is not installed correctly, is not covered by the warranty.

There should be an open connection of the condensate hose into the sewage system. Pressure fluctuations in the sewer system may not affect the pressure in the condensate drain hose, supplied with the siphon:

The siphon must be checked at least once a year. Disassemble the siphon and clean every part of it. Check the functioning of the siphon by filling it with water. Then blow into the top condensate inlet, gently increase the pressure. At some point water starts coming out of the siphon outlet. During this the floating ball should gradually drop into its seat. By doing this, the ball closing the outlet (almost) completely.

When mounting the siphon, before commissioning the boiler and/or after maintenance, the siphon must **ALWAYS** be completely filled with water.

This is a safety measure: the water in the siphon keeps the flue gases from leaking out of the heat exchanger via the condensate drain.

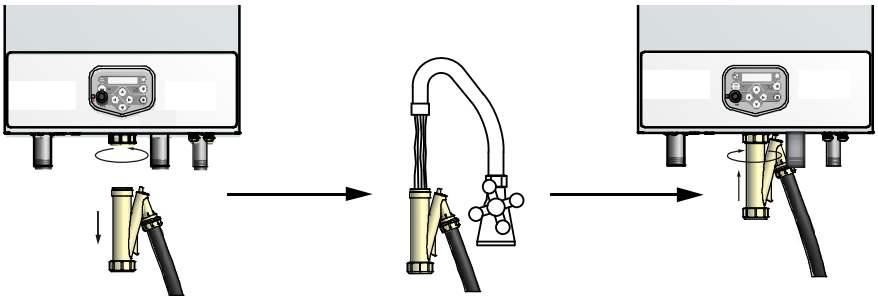

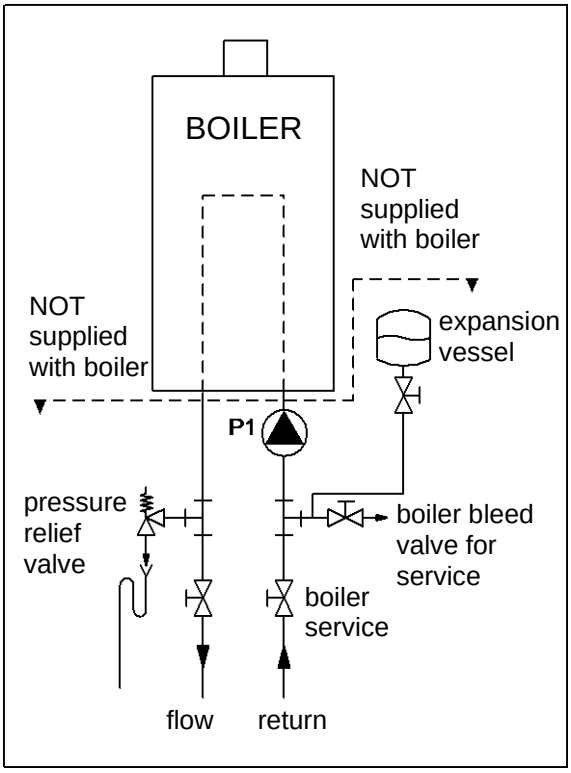

6.3. Flow and return connections

In the picture, an example is shown of the installation of the flow and return connections in combination with several functional and/or safety components. The picture does not necessarily contain ALL safety components that may or must be applied - always have the installation carried out by a skilled installer according to all applicable standards and regulations.

It is advised to install two service valves underneath the boiler, so the boiler can be isolated from the heating system, when needed. The valves must be positioned in such a way that no safety components like pressure relief valves and expansion vessels can be isolated from the boiler.

The boiler pump should always be mounted in the return pipe of the boiler.
When using a system pump, this pump should always be mounted in the return pipe of the heating system.
Never use chlorine-based fluxes for soldering any pipes of the water system.

NOTICE: Accessories in the picture are NOT supplied with the boiler.

6.4. The expansion vessel

The capacity of the expansion vessel must be selected and based on the capacity of the central heating system and the static pressure. Suggested is to fit the expansion vessel in the return pipe of the central heating system. It can be combined with the drain valve for service.

6.5. Pressure relief valve

The boiler has no internal pressure relief valve. This should be installed in the flow pipe of the heating system and close to the boiler. When having cascaded boilers, each boiler should have its own pressure relief valve. It is advised to use a T-piece for this.
Advise is always to install service valves, so the boiler can be isolated from the heating system, when needed. Make sure that the pressure relief valve is mounted between the boiler and the service valves.
The pressure relief valve must always be installed in such a way that it cannot be isolated from the boiler by a valve. The specifications and size of the relief valve should be determined by the installer and must comply with all applicable regulations and boiler capacity.

6.6. Bypass

The boiler has no internal bypass. When many thermostatic valves are being used, the system should have a bypass to allow an adequate flow when all thermostatic valves are closed. Instead of a bypass also a low-loss header can be used for this function.
The boiler flow will also be influenced when a pipe of the heating system is frozen/blocked. Make sure all heating pipes are free from the risk of frost. If there is the risk of freezing of the heating system, all the pipe sections must be insulated and/or protected with the help of a tracing.

6.7. Pump functionality

- The external pump must be mounted <u>in the return pipe</u> of the boiler.
- The boiler pump must be controlled by the Strebel S-CB PX 120 control. If, for any reason, an external pump control is applied *without written approval of Strebel*, the complete warranty on the S-CB PX 120 and all supplied parts will become invalid.

High efficiency pump (default settings)
The pump is controlled by a PWM signal from the burner controller. It's set point is based on a delta T of 20°C. This means, that when the burner is on full load, delta T = 20°C, and when the burner modulates down, the pump also modulates down keeping delta T 20°C (provided it is still in range of the lowest limit of the pump).

The delta T monitoring parameters have been set so, that a malfunctioning of the pump or an extreme resistance in the hydraulic system will be detected by the burner controller. When the limits of these parameters are exceeded, the display message "dT Block" will be displayed. This message will disappear when the delta T is within limits again, if not the boiler will go into a lock out after 45 seconds and the display will blink with the message "FlowReturn dTfault." <u>Therefore, no commissioning valves should be installed on the primary pipework (boiler side).</u>

ON/OFF pump
If an on/off pump is used, it must be connected to the P3 control (23-24-25).

When this pump has multiple speed settings, make sure it is set at the highest setting and **do not change this setting.** The boiler has an internal pump switch that has a programmable delay before it turns off (also for hot water supply this delay is programmable).

The pump starts running in case of a heat demand. When heat demand stops, the pump will continue to run for a programmed period and after that it will stop. The pump and (when installed) the three-way valve or hot water pump for the calorifier can be activated every 24 hours (for a programmable period). This 24-hour cycle starts as soon as the power supply of the boiler is connected.

6.8. Frost protection

The boiler has a built-in frost protection, that is automatically activating the CH pump when the boiler return temperature drops below the 5°C. When the boiler return temperature drops below the 3°C, the burner is also ignited. The pump and/or burner will shut down as soon as the return temperature has reached the 10°C. The mentioned temperatures are related to the temperatures measured by the RETURN sensor of the boiler. This frost protection function will not fire up the boiler in case of a "general blocking" of the burner demand.

NOTICE: This frost protection is only to reduce the risk of frost damage to the boiler, not the whole system.

Be aware that flow restrictions in the system, caused by frozen pipes, will also prevent the water flow, needed for the boiler frost protection function to work. Because it concerns a programmable setting, boiler damage caused by frost/freezing will affect warranty.

6.9. Installing a strainer and/or dirt separator

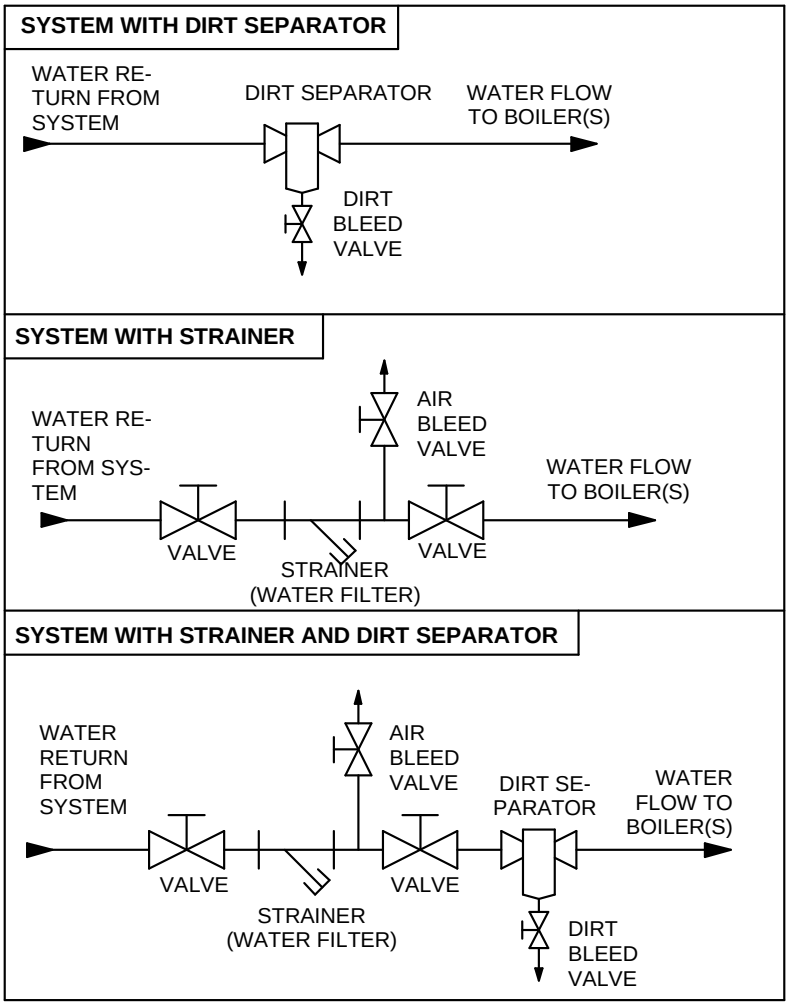

Always install a strainer (water filter) and/or a dirt separator on the system side after a low loss header / Strebel boiler guard / plate heat exchanger on the return pipe pipework – not on the boiler side (primary)! This will ensure that the water going to the boiler is free of any flow restrictions. When using a water filter always check a week after installation to determine the strainer cleaning interval. Advice is to mount valves before and after the strainer, including an air bleed valve, so the strainer can be isolated from the heating circuit for service operations. Clean water is very important, blocked and/or polluted heat exchangers, including failures and/or damages caused by this blockage are not covered by the warranty.

6.10. Water quality

The pH value of the water must be within the following limits: 7,5 < pH < 9,5. This pH value is reached with the steady conditions. These steady conditions will occur, when after filling the heating system (pH around 7) with fresh water, the water will lose its air because of the air bleeding operation and heating up (dead water conditions).

Water hardness must be within the following limits:
3,5° Clark (50 ppm $CaCO_3$) < total hardness < 10,5° Clark (150 ppm $CaCO_3$)

When the water might contain aluminium particles, this should be of a maximum of 8.5 ppm. If there is any risk of contamination of the water by any kind of debris/chemicals in the period after installing, a plate heat exchanger should be used to separate the boiler circuit from the heating circuit (see drawing below).

It is advised to prevent the possible air intake and water leakage of the central heating system. Fresh oxygenated water might damage the heat exchanger of the boiler and should therefore be prevented. Usual spots where air is most likely to seep in are: suction gaskets, pumps, air valve working as a venting pipe, O-rings / gaskets in stuffing box, under floor heating pipes.

6.11. Plastic piping in the heating system

When plastic pipes are used in the central heating system and **NOT** oxygen diffusion proof to standard DIN 4726, these should be separated from the boiler system by using a plate heat exchanger. Diffusion (through the plastic) can cause air to enter the heating system. This could damage the boiler, pumps and other components in the system. Be aware that plastic piping is often used in under floor heating systems. When no measures have been taken to prevent the entrance of air into the boiler system, the warranty of the boiler and any boiler part may be deemed invalid.

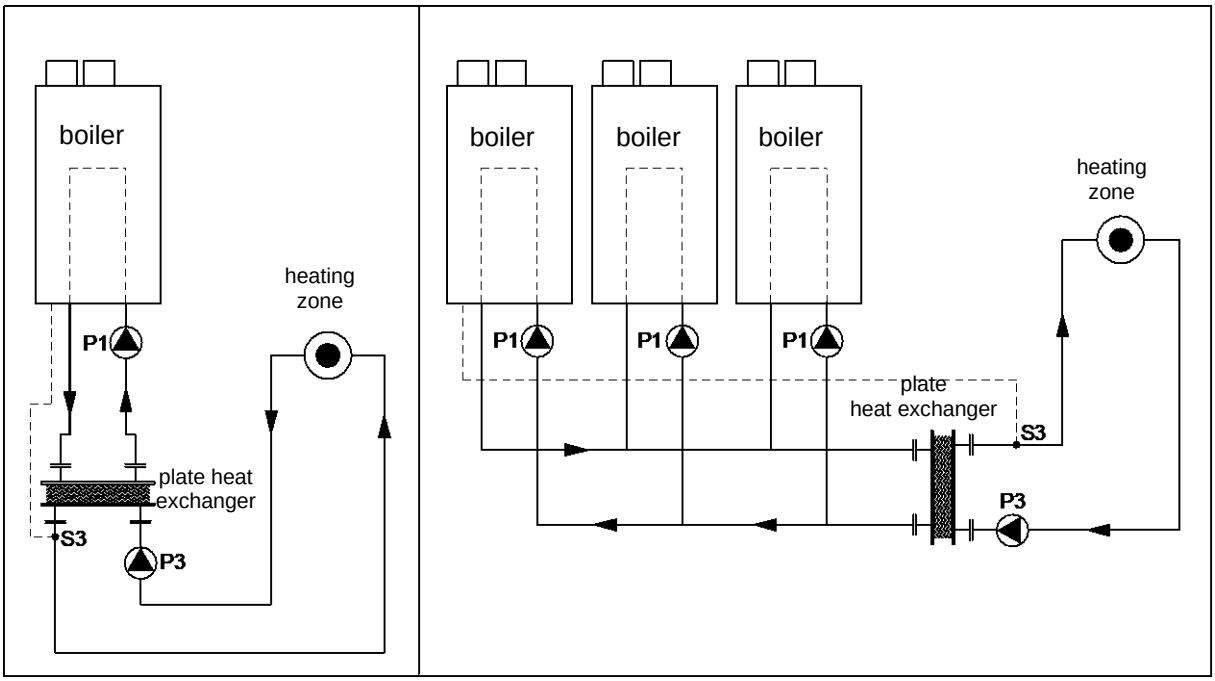

6.12. Automatic air vent

This automatic air vent is only used for bleeding the air from the heat exchanger of the boiler, while filling the system. Externally measures must be taken to bleed air from the heating system, using air separators in combination with automatic air vents. DE-AERATION PROGRAM. When the unit is fired for the first time the unit starts a de-aeration program. One cycle means 5 seconds pump running and 5 seconds pump off. A complete de-aeration program consists out of THREE cycles. The de-aeration program can be interrupted/stopped by briefly pressing the service button.

6.13. Automatic water filling systems

When using an automatic water refill system some precautions should be taken (fresh water is bringing fresh oxygen into the system), like installing a water meter to measure and evaluate the total water volume that is added to the system. Some form of logging should take place, so that continuously filling of the system with large amounts of oxygen rich fresh water, indicating leakage, is detected in time.

6.14. Water pressure

First and for all, the installation should be designed and built conform all applicable regulations and standards, including the right safety valves.
IMPORTANT: Always keep the pressure in the boiler lower than the value at which its safety valve opens.

Sensor
A water pressure sensor has been built into the boiler. With this sensor, the minimum water pressure in the boiler is 0,8 bar and the maximum pressure is up to 4,0 bar (sensor values). The normal water pressure is supposed to be between 1,5 and 2,0 bar.
The pressure sensor will stop the boiler from firing when the water pressure drops below 0.8 bar, and start the boiler firing again when the water pressure reaches above the 1.0 bar. These values can be changed in the boiler control settings.

Higher pressure systems (e.g. in high buildings)
If pressures higher than 4,0 bar occur in the heating system, the best solution is to separate the system from the boiler by means of a plate heat exchanger. Now the boiler pressure can still be under 4,0 bar and the boiler control remains as described above.
Without plate heat exchanger, above 4,0 bar, a water pressure switch has to be built into the boiler instead of the water pressure sensor - the maximum allowed value in the boiler now is 6,0 bar and the boiler control needs to be adjusted.

6.15. Chemical water treatment

The chemical compatibility of several products for treatment of the central heating equipment has been tested on the heat exchangers and the boilers. A list of corrosion inhibitors in preventative and curative treatment for gas fired central heating boilers can be supplied by the manufacturer.

6.16. Under floor heating

When using an under-floor heating system, the boiler circuit must be separated from the heating circuit with a plate heat exchanger.

6.17. Flush the system with fresh water

The water of the boiler and heating circuit should be free of any particles, debris and pollution. Therefore, the complete installation must always be thoroughly flushed with clean water before installing and using the boiler(s).

6.18. Installation examples

6.18.1. EXAMPLE OF A NORMAL SINGLE BOILER HEATING CIRCUIT (PREFERABLE)

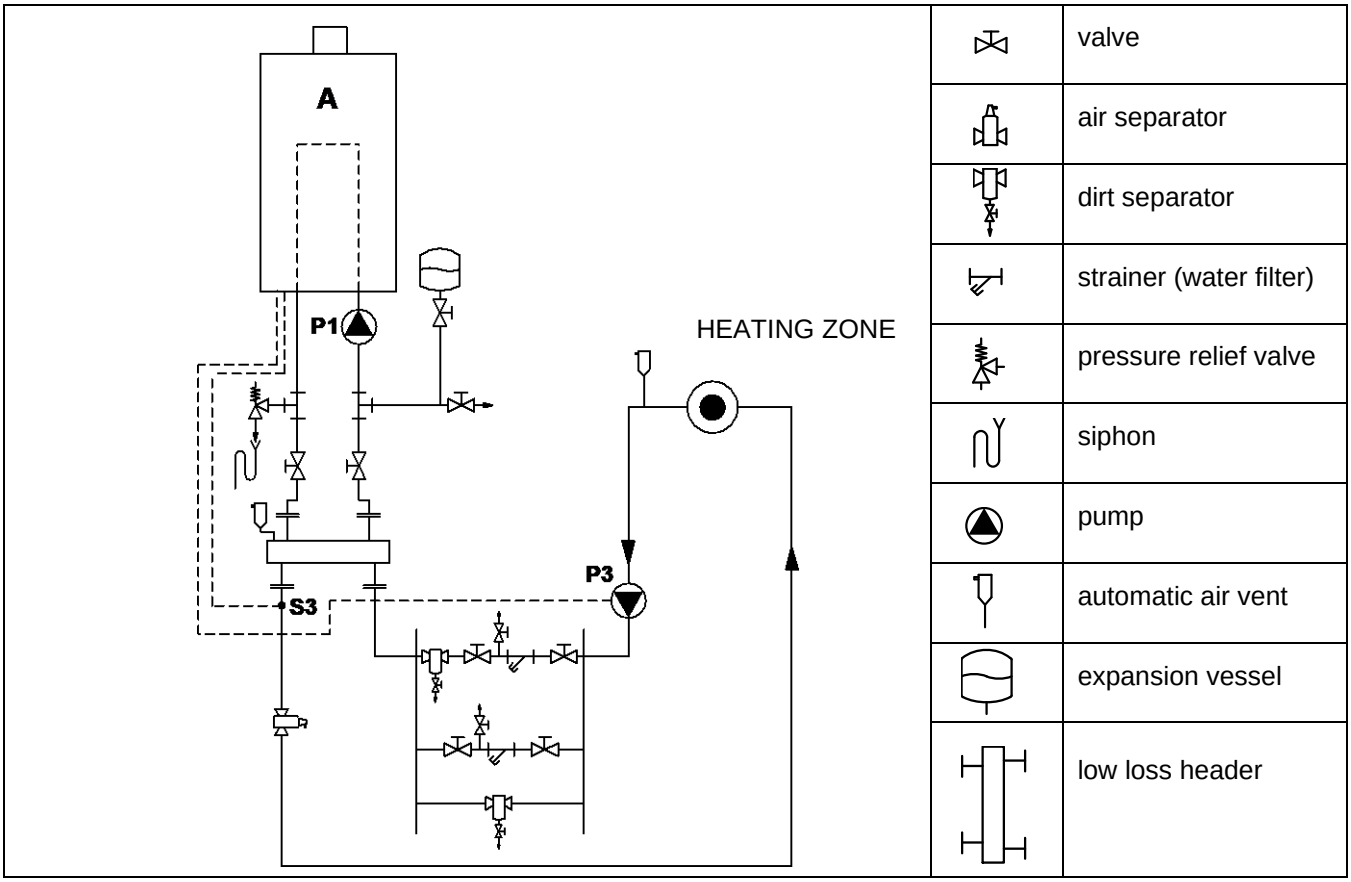

6.18.2. EXAMPLE OF A MULTIPLE BOILER HEATING CIRCUIT

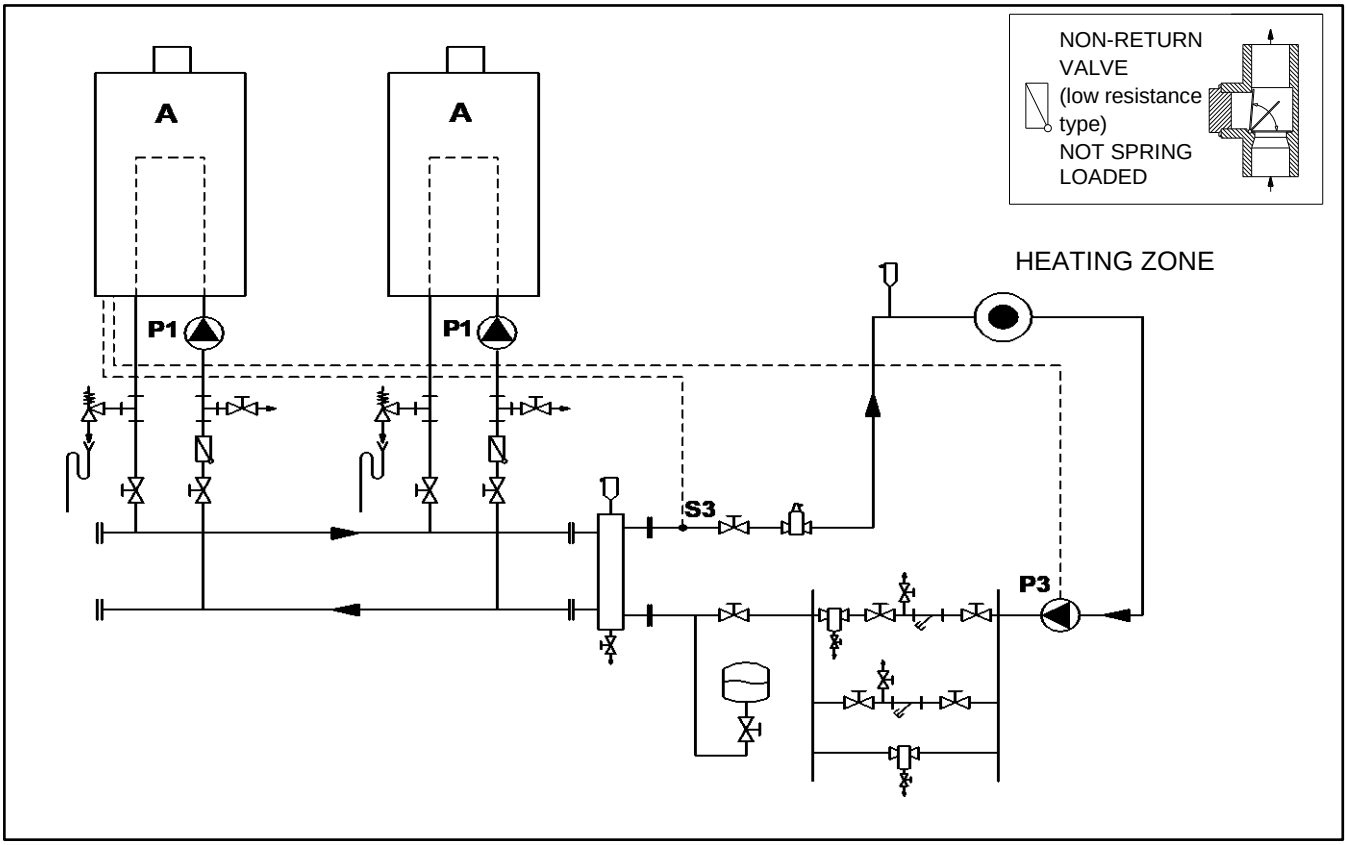

7. HYDRAULIC GRAPH BOILER RESISTANCE (mWC)

7.1. High efficiency pump

The boiler software is set on a modulating pump.

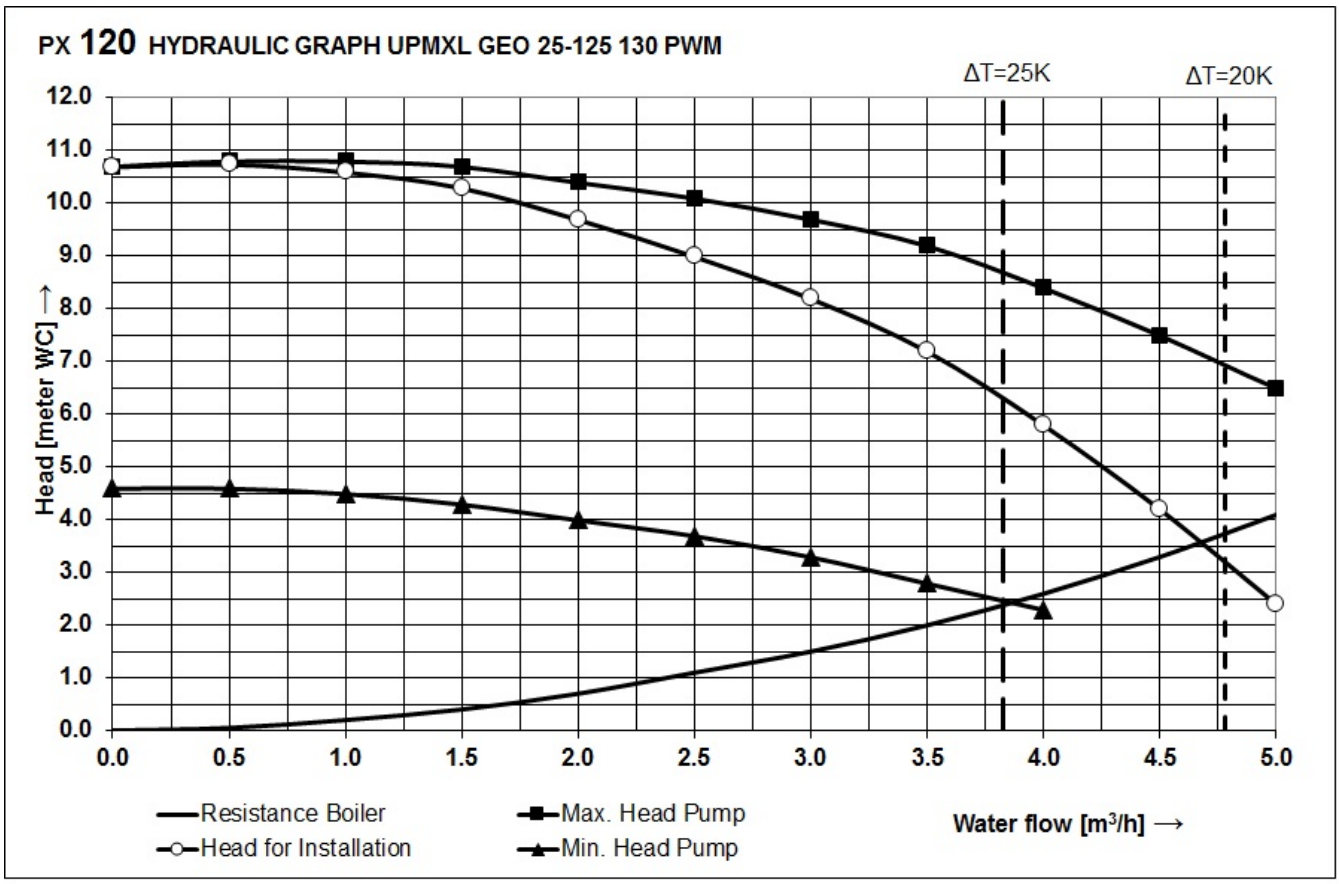

“Head Pump” characteristic line based on the UPMXL 25-125 130 PWM pump.

In this graph, a minimum and a maximum head for the pump are depicted; the pump will modulate between these two levels.

7.2. Pumps: Electrical Power Limits

General
- The inrush current of a conventional pump is approximately 2½ x its nominal current.
- The maximum current, that the relay on the PCB can switch, is 5 A.

The conclusion from this is that nominal currents of pumps, which are controlled by the PCB, may not exceed 2 A.

Pump P1 - boiler pump.
Modulating boiler pump is connected to fixed power supply 30-31-32. Relay P1 is not used.

Pump P2 - calorifier pump.
Pump P2 is a DHWi pump and is used when P4AA = 1, meaning the appliance is an indirect calorifier.
Pump P2 is connected to one fuse of 5 A.
The maximum allowed nominal current of pump P2 is 2 A, again due to inrush current. P_{max}= 460 W.

3-way valve.
The nominal current of the 3-way valve must be smaller than 5 A.
So, the inrush current of the 3-way valve must be lower than 3 A

Pump P3 - system pump.
The nominal current of pump P3 must be equal to or lower than 2 A, implying P_{max}= 460 W.

Warning (EC pumps):
In case of using an electronic commutating pump, the relays 1, 2 or 3 <u>may not be used</u> for the power connection, because of the inrush current of the electronics of the pump.
Directly connect the pump to an external power supply.
Control connections of an EC pump can be established in several ways, set by parameter P5BN.

7.3. Pump installation.

In case of applying the UPMXL 25-125 130 PWM pump use below given explanation to install this pump

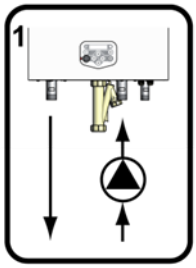

1. Connect the pump hydraulically to the return connection of the boiler and the system

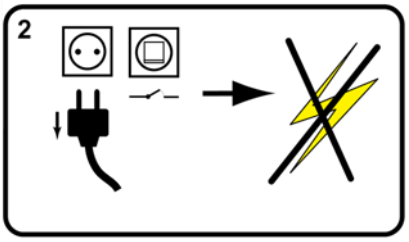

2. Disconnect the electrical connection of the boiler to the mains

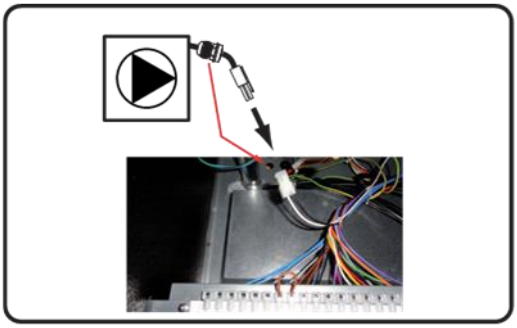

3. Use one of the spare holes in the bottom plate of the boiler to assemble the cable gland and pump signal cable.
Connect the pump signal connector to the burner controller connector as shown in the picture.

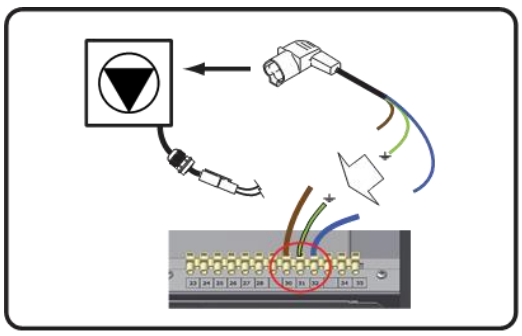

4. Use one of the spare cable glands in the bottom plate to assemble the cable into the boiler.
Connect the pump mains wires to screw terminals 30, 31 and 32
The connections are placed on top of the display panel and can be accessed by removing the boiler front door and the connector protection cover

8. FLUE GAS DISCHARGE AND AIR SUPPLY SYSTEM

8.1. General

The boiler has a positive pressure flue system. The available combined pressure drop for the inlet and outlet system **is 160 Pa.**

Notice:

- Install the horizontal flue components with a 3% fall in the direction of the boiler (about five centimetres for every linear meter). When not installed accordingly it may result in condensation building up in the flue gas tube which may cause component failure.
- It is preferable to use roof terminals. Because of the high capacity, using wall terminals on the S-CB PX 120 can give unpleasant large flue gas clouds. When installed correctly, roof terminals in general give a better flue gas dilution with the surrounding air, and a good transport away from the surroundings and the air inlet. This is valid for concentric roof terminals and for a separate air inlet nearby a separate flue gas outlet.
- When using a wall terminal, there is a risk of ice building-up on surrounding parts/structures, because the condensate may freeze. This risk should be taken into account during the design phase of the heating installation.

Note.
Because the flue gases can have a low temperature, the boiler needs to have a high efficiency approved stainless steel or plastic flue system. These materials, including the gaskets, should be usable for positive pressure flue gas systems and have a temperature class of **T120**.

8.2. C63 certified

In general, boilers are certified with their own flue gas material.

If a boiler is C63 certified, no specific type flue gas material has been certified in combination with the boiler. In this case the flue gas and air supply parts should comply with the applicable European standards (EN14989).

So, for type C63 systems flue gas and air supply parts from other suppliers can be used. It must be able to handle the condensate forming (W) and transport, overpressure (P1) and must have a minimum temperature class of **T120**. Also, it has to meet the requirements in the following chapters "flue terminal" and “air supply.”

CE string flue gas material	European standard	Temperature class	Pressure class	Resistance to condensate	Corrosion resistance class	Metal: liner specifications	Soot fire resistance class	Distance to combustible material	Plastics: location	Plastics: fire behaviour	Plastics: enclosure
min. req. PP	EN 14471	T120	P1	W	1		O	30	I of E	C/E	L
min. req. SS	EN 1856-1	T120	P1	W	1	L20040	O	40			

A few examples of flue gas material suitable for S-CB PX 120 boilers:

CE String for Plastic PPs: EN14471 T120 P1 W 2 O(30) I C/E L
CE String for Stainless Steel: EN1856-1 T250 P1 W V2-L50040 O (50)

When selecting flue gas systems, be aware that the minimum requirements are met. So only select flue gas materials having the same or better properties than this table.

⚠ Never use aluminium containing flue gas pipes in these boilers.

Connecting diameters and tolerances:

mat	boiler	d_{nom}	$D_{outside}$	d_{inside}	L_{insert}
SS	S-CB PX 120	100	100 +0,3/ -0,7	101 +0,3/ -0,3	50 +2/ -2
PP	S-CB PX 120	100	100 +0,6/ -0,6		50 +20/ -2

8.3. Flue Terminal

Never use aluminum containing flue gas materials for this boiler range

The flue terminal duct can be made of:
- Stainless steel in combination with **T120** gaskets.
- PP temperature class **T120.**

8.3.1. Horizontal Flue Terminal Positioning

Please refer to the relevant British Standards:
- BS 5440-2 – Flueing and Ventilation for Gas Appliances of Rated Input not Exceeding 70kW = (S-CB^{+}60).
- BS 6644 – Installation of gas fired hot water boilers of rated inputs between 70kW – 1.8MW.

Please refer to the Instition of Gas Engineers and Manager Documents (IGEM):
- IGEM/UP/10 Edition 4 – Installation of gas fired hot water boilers of rated inputs between 70kW – 20MW.
  ***** Appendix 9 – Risk Assessment for Postioning of Horizontal Flues Terminations.**

8.3.2. Vertical Flue Terminal Positioning

Please refer to the relevant British Standards:
- BS 5440-2 – Flueing and Ventilation for Gas Appliances of Rated Input not Exceeding 70kW = (S-CB^{+}60).
- BS 6644 – Installation of gas fired hot water boilers of rated inputs between 70kW – 1.8MW.

Please refer to the Instition of Gas Engineers and Manager Documents (IGEM):
- IGEM/UP/10 Edition 4 – Installation of gas fired hot water boilers of rated inputs between 70kW – 20MW.

8.3.3. Common Flue / Ducts

Multiple boilers can be connected to a common duct. These flue gas systems for multiple boiler installations must always be engineered as zero or negative pressure systems; this to prevent the risk of recirculation of the flue gases. **In circumstances where a zero or negative pressure cannot be achieved, please call Strebel Ltd Technical Department for advice.**

8.4. Air supply

When an air supply duct is connected from the outside of the building to the boiler, the boiler will operate as a room-sealed boiler (closed boiler).

The air supply duct can be made of:
- PVC / PP
- Thin-walled aluminium
- Stainless steel

The air supplied for the boiler room ventilation shall be such that the maximum temperatures within the boiler house shall be:
- 25°C at floor level (or 100mm above floor level);
- 32°C at mid-level (1.5m above floor level); and
- 40°C at ceiling level (or 100mm below ceiling level).

8.4.1. Combustion air quality

Combustion air must be free of contaminants. For example: chlorine, ammonia and/or alkali agents, dust, sand and pollen. Remind that installing a boiler near a swimming pool, a washing machine, laundry or chemical plants does expose combustion air to these contaminants.

8.4.2. Air supply through humid areas

When the supply duct will be placed in a boiler room with moist air (for example: greenhouses), a double walled supply duct or an insulated duct must be used to prevent the possible condensation at the outside of the duct. It is not possible to insulate the internal air pipes of the boiler and therefore condensation at the internal air canals must be prevented.
When roof mounted, the air supply duct needs to be protected against rain, so no water will be entering the boiler

8.5. Pipe heights on a flat roof

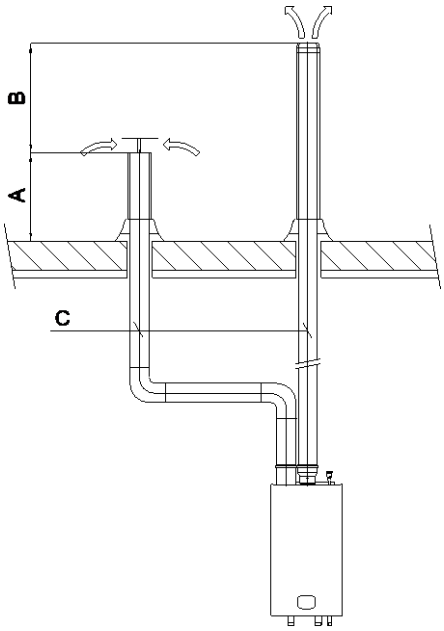

Height A

This is the height of the air inlet. A rain hood should prevent rain-water entering the air supply system.
When the inlet and outlet are mounted on a flat roof, the inlet should be at least 600 mm above the roof surface and at least 300 mm above the maximum snow level.

Example 1:
When the maximum snow level on the roof surface is 450 mm then the air inlet should be at 450+300=750 mm. 750 mm is more than the minimum 600 so the height will be 750 mm.

Example 2:
When the maximum snow level on the roof surface is 150 mm then the air inlet should be at 150+300=450 mm. 450 mm is less than the minimum 600 mm so the height will be 600 mm.

Height difference B

This is the distance between the flue outlet and the air inlet.
The flue gas outlet should be at least 700 mm above the air inlet. It is advised to be equipped with a conical outlet.
When no air inlet connection is applied on the roof, the flue outlet should be situated at least 1000 mm above the roof surface.

Distance C

The horizontal distance between the flue gas discharge pipe and air inlet pipe at roof level.
This distance should be at least 700 mm.

8.6. *Minimum Terminal Distance on Horizontal Terminations – Type C Flues Only*

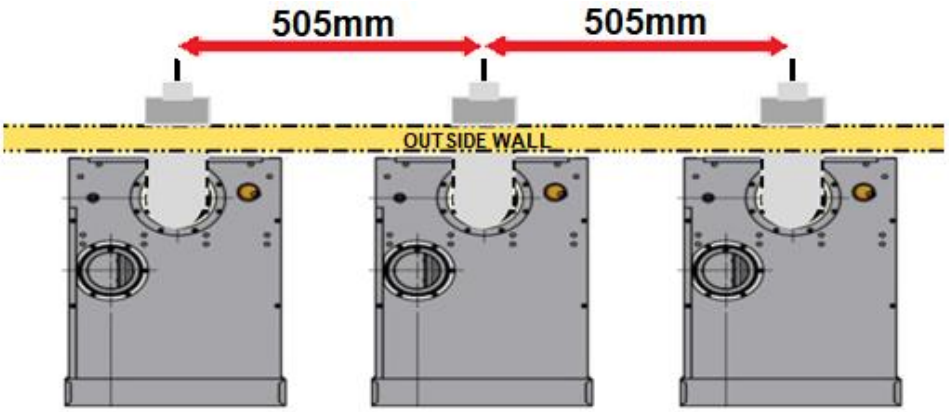

IMPORTANT!
The location of the wall terminals must be considered with regards to products of combustion potentially building up around the terminals thus allowing products of combustion to flow down the air intake flue into the S-CB PX 120 boiler. The build-up of products of combustion can be caused by certain conditions such as poor cross flow or air caused by weather conditions, enclosures or adjacent buildings. If there are any doubts, then we would recommend one of the following:

- Wall Terminal c/w Exhaust Plume Kit – A standard kit will move the exhaust terminal 1 metre higher than the fresh air intake.
- Stagger the Coaxial Wall Terminals to increase the distance between the terminals – With this method, stagger the even number terminals higher than the odd number terminals. For example, terminals 1 – 3 will be the same height and terminals 2 – 4 will be higher, high enough to prevent build-up of combustion around the terminals.

Any boiler faults / failures caused by products of combustion flowing down the air intake flue due to building up around the terminals will not be covered by our manufacturer's warranty.

8.7. *Horizontal Flue Run Risk Assessment*

Using the below risk assessment as per IGEM/UP/10 appendix 9 to work out if the horizontal flue terminal position is suitable or not.

Type C appliances with net heat input exceeding 70kW and not exceeding 333kW low level flue discharge risk assessment (including net heat input for groups of appliances)			
No.	**Flue Position**	**Yes**	**No**
1	Is the suggested flue terminal location within the distance of the formula shown in chapter 8.7.1 titled figure 12 line G of a road, path, track, thoroughfare, walkway, property boundary or an area which is used for general public access other than for maintenance purposes?		
2	Is the suggested flue terminal location within the distance of the formula shown in chapter 8.7.1 titled figure 12 line G to a playground, school yard, seating area where there may be public gathering?		
3	Is the suggested flue terminal location within the distance of the formula shown in chapter 8.7.1 titled figure 12 line G of a surface or building that may be affected by corrosion or deterioration from plume condensate?		
4	Is the suggested flue terminal location within the distance of the formula shown in chapter 8.7.1 titled figure 12 line G to an area where vehicles could be parked?		
5	Is the suggested flue terminal location within the distance of the formula shown in chapter 8.7.1 titled figure 12 line G of any trees, branches or shrubs?		
6	Is the suggested flue terminal location within the distance of the formula shown in chapter 8.7.2 titled figure 7 line Y to a wall when enclosed by two or more vertical walls		
7	Is the suggested flue terminal location within a light well?		
8	Are the products of combustion from the suggested flue terminal location likely to build up under certain conditions, due to poor cross flow or air caused by enclosures or adjacent stuctures that is likely to cause nuisance?		
9	is the suggested flue terminal location likely to cause a nuisance to adjoining properties?		
	Clean Air Act	**Yes**	**No**
10	Is the total net input of individual or group of flue terminals greater than 333kW net input?		
	Building Regulations Part J	**Yes**	**No**
11	Is the suggested flue terminal position less than 300mm from the boundary of the property, as measured from the side of the terminal to the boundary?		

All above answers are **NO**	Flue Position is Suitable	Any above answers **YES**	Flue Position in Unsuitable

8.7.1. FIGURE 12 – LINE G

19.32 x (net heat input kW) + 647.59 = mm

8.7.2. FIGURE 7 – LINE Y

7.232 x (net heat input kW) + 93.708 = mm

8.8. Other Flue Terminal Minimum Distances

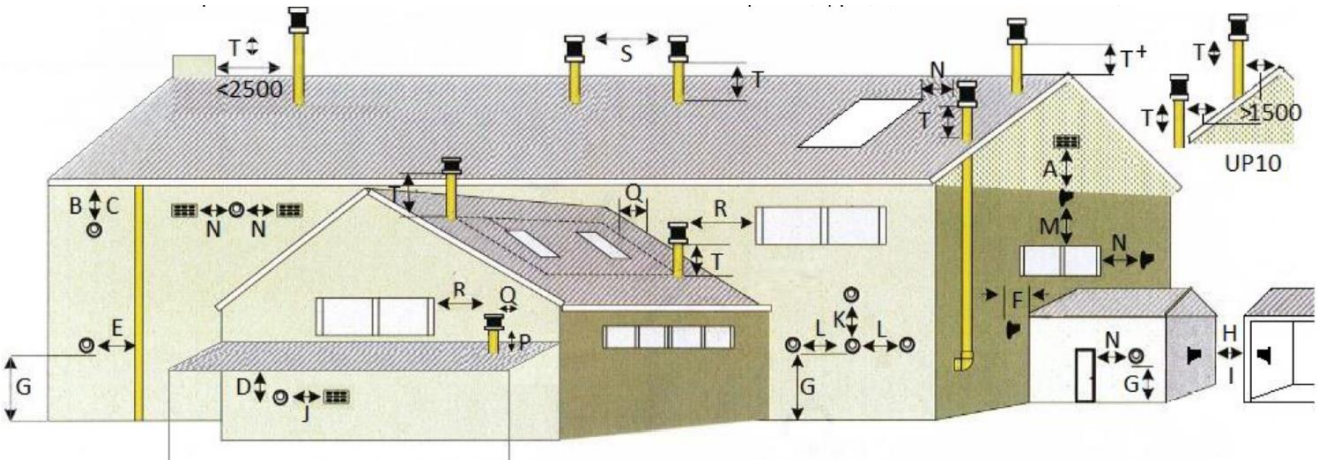

All measurements are in mm

Terminal Location		Boiler Manufacturers & IGEM-UP-10 Boilers Rated >70kW <333kW Net Input (Fan Draught) Room Sealed (Type C Classification)
A	Directly below an opening into the building	2500
B	Below gutter soil pipes etc.	200
C	Below Eaves	200
D	Below balconies or car port roof	Not Recommended **
E	From vertical drain or soil pipe etc.	150
F	From internal or external corners	If < 2500 - use plume kit & plume kit extensions
G	Above ground or balcony level	2000 with terminal guard – 3000 without
H	From a surface facing the terminal	23.126 x (kW net input) + 618.84
I	From a terminal facing the terminal *	19.32 x (kW net input) + 647.59
J	From opening in a carport into a dwelling	Not Recommended **
K	Vertically from a terminal on the same wall	2500mm
L	Horizontally from a terminal on the same wall	See Chapter 9.10 = 505mm centre to centre
M	Above an opening into the building	7.232 x (kW net input) + 93.708
N	Horizontally to an opening into the building	7.232 x (kW net input) + 93.708
P	Above a flat roof (Obstacle > 2500mm)	4.5675 x (kW net input) - 19.723
P+	Above a flat roof (Obstacle < 2500mm)	4.5675 x (kW net input) - 19.723
Q	From an adjacent wall (Edge of terminal)	If < 2500 - use plume kit & plume kit extensions
R	To an opening into the building	7.232 x (kW net input) + 93.708
S	From any other terminal	See Chapter 9.9 = 700mm centre to centre
T	Above a >20 Deg Pitched Roof (BOT)	4.5675 x (kW net input) - 19.723
T+	Above a >20 Deg Pitched Roof (BOT) - Valley	4.5675 x (kW net input) - 19.723

*Positions not recommended **Risk assessment required (Chapter 9.11) BOT = Base of Terminal

8.9. Flue gas outlet & combustion air inlet calculation examples

For six typical flue gas outlet & air inlet configurations the maximum lengths of the straight pipes will be calculated. First the general component values are given in the next table**:**

Component	Resistance R [Pa]		
	* twin pipe **Ø 100**		* conc. **Ø 100/150**
	flue	air	
straight tube/m	6,5	4,0	10
45° bend	3,2	2,0	9,0
90° bend	6,5	4,0	13
roof terminal zeta = 0,05	1,1		
roof terminal zeta = 1,0	22,1	16,7	
roof terminal zeta = 1,5	33,2		
roof terminal concentric			45
wall terminal			24
concentric/TP adaptor			22

*** Do NOT reduce pipe diameters relative to boiler connection diameter.**

Zeta values:

FLUE GAS OUTLET

zeta = 0
open outlet

zeta = 0,05
conical outlet

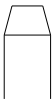

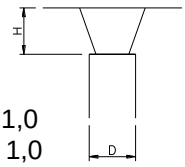

H/D = 1,0
zeta = 1,0

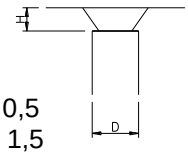

H/D = 0,5
zeta = 1,5

AIR INLET

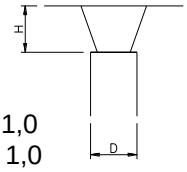

H/D = 1,0
zeta = 1,0

CONCENTRIC
FLUE GAS OUTLET
AIR INLET

ROOF

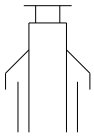

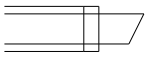

WALL

NOTICE: This table can only be used for a single flue/air system for one boiler. Do NOT use this table for common flue systems with cascaded boilers.

8.10. Six typical examples

A:	Twin pipe system with separate pipes for flue gas and air supply	**C63**
B:	Twin pipe system with separate pipes and concentric roof terminal	**C33**
C:	Single pipe for flue gas outlet only (air supply from boiler room)	**B23**
D:	Concentric pipe for flue gas/air supply (roof-mounted)	**C33**
E:	Concentric pipe for flue gas/air supply (wall-mounted)	**C13**
F:	Separate air supply duct & flue duct in different pressure zone	**C53**

8.10.1. EXAMPLE A: TWIN PIPE SYSTEM (C63)

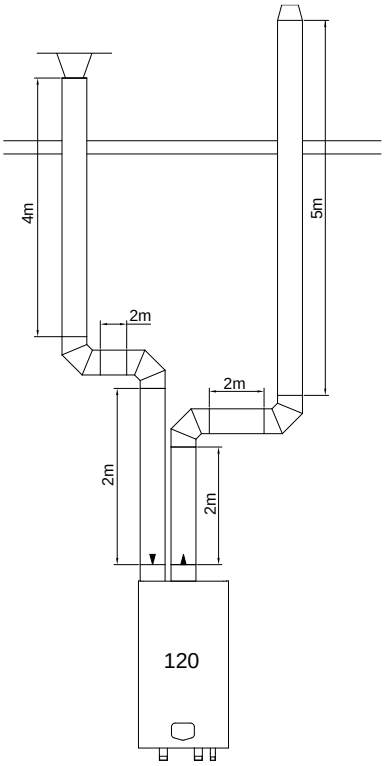

Calculation example with given lengths: checking resistance

Boiler type:		**S-CB PX 120**		
Flue gas	**Diameter: 100 mm**		**Number**	**Pa**	**Pa total**
	Straight tube m¹	total	9	6,5	58,5
	Bend	90°	2	6,5	13,0
	Flue outlet	conical	1	22,1	22,1
	Total resistance flue gas outlet:				**93,6**
Air supply	**Diameter: 130 mm**		**Number**	**Pa**	**Pa total**
	Straight tube m¹	total	8	4	32
	Bend	90°	2	4	8
	Air inlet	H/D = 1,0	1	16,7	16,7
	Total resistance air supply:				**56,7**
Total resistance flue gas outlet and air supply:					**150,3 Pa**

The total resistance is less than 160 Pa. This flue gas / air supply system is functional.

Be aware: Strebel specific resistance values are used in this example. Flue and air pipes of other supplier can have other values

8.10.2. EXAMPLE B: TWIN PIPE SYSTEM WITH CONCENTRIC ROOF TERMINAL (C33)

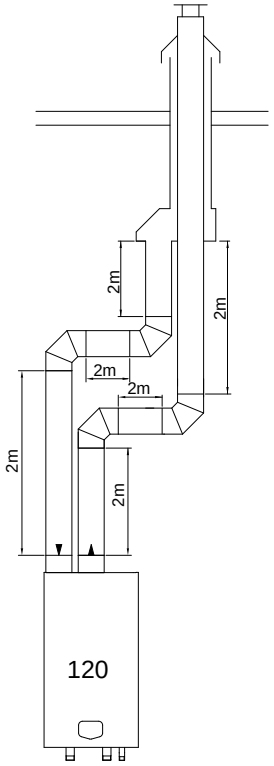

Calculation example with given lengths: checking resistance

Boiler type:		**S-CB PX 120**		
Flue gas	**Diameter: 100 mm**		**Number**	**Pa**	**Pa total**
	Straight tube m¹	total	6	6,5	39
	Bend	90°	2	6,5	13
	Roof terminal	concentric 150/100	1	45	45
	Adaptor conc./par.	150/100	1	22	22
	Total resistance flue gas outlet:				**119**
Air supply	**Diameter: 100 mm**		**Number**	**Pa**	**Pa total**
	Straight tube m¹	total	6	4	24
	Bend	90°	2	4	8
	Total resistance air supply:				**32**
Total resistance flue gas outlet and air supply:					**151 Pa**

The total resistance is less than 160 Pa. This flue gas / air supply system is functional.

Examples A (C63) and B (C33) maximum pipe lengths

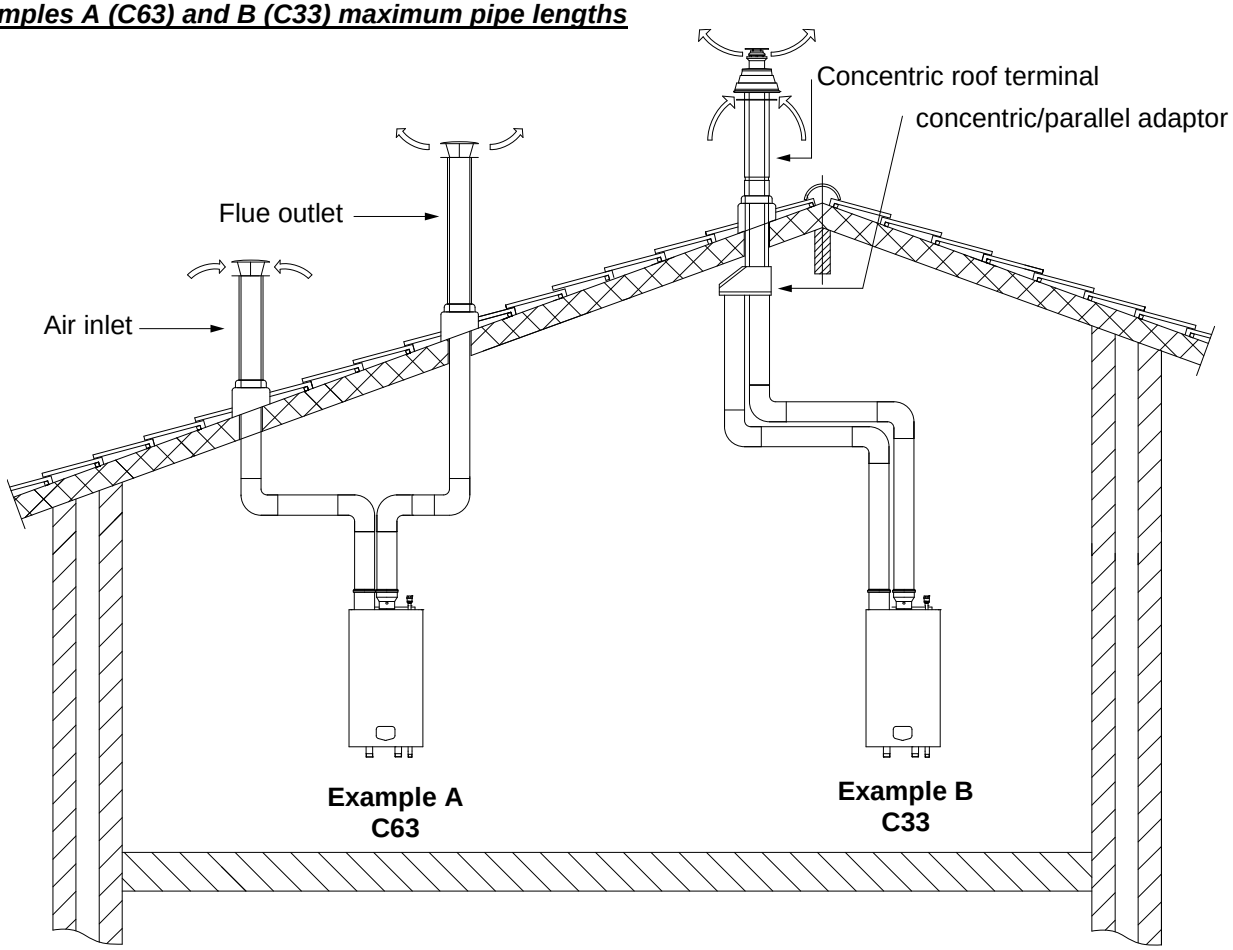

Example A (C63)		
	Boiler type →	**PX 120**
Diameter air inlet	[mm]	100
Diameter flue outlet	[mm]	100
Diam. roof terminals	[mm]	100
Maximum pipe length (inlet + outlet together)	**[m]**	**15,0**

Example B (C33)		
	Boiler type →	**PX 120**
Diameter air inlet	[mm]	100
Diameter flue outlet	[mm]	100
Diam. roof terminals	[mm]	100/150
Maximum pipe length (inlet + outlet together)	**[m]**	**11**

8.10.3. EXAMPLE C: SINGLE FLUE GAS OUTLET. AIR SUPPLY FROM BOILER ROOM

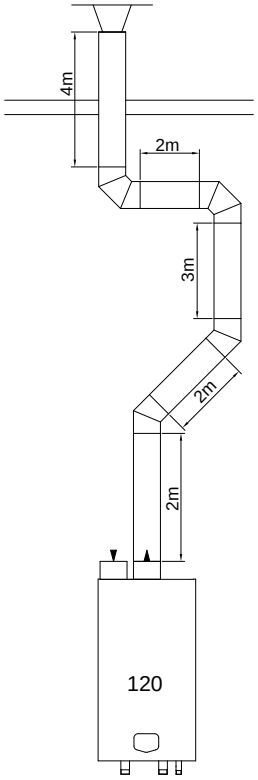

Calculation example with given lengths: checking resistance

Boiler type:		**S-CB PX 120**		
Flue gas	**Diameter: 100 mm**		**Number**	**Pa**	**Pa total**
	Straight tube m¹	total	13	6,5	84,5
	Bend	45°	2	3,2	6,4
	Bend	90°	2	6,5	13,0
	Flue outlet	H/D = 1,0	1	22,1	22,1
	Total resistance flue gas outlet:				**126**

The total resistance is less than 160 Pa. This flue gas / air supply system is functional.

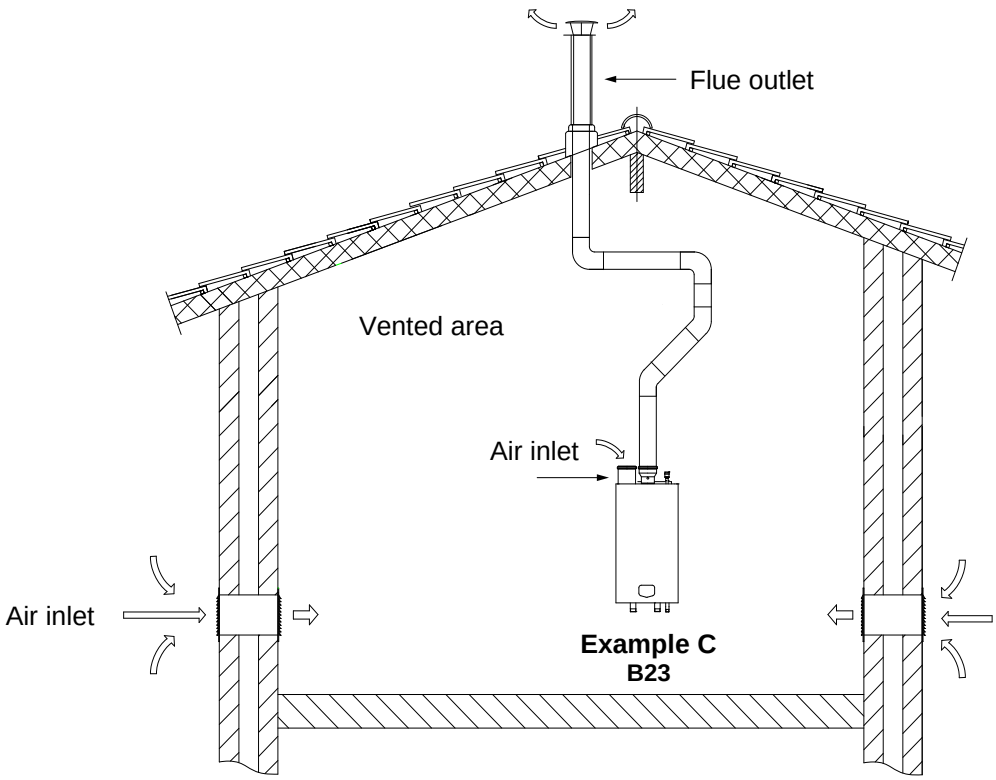

Example C (B23)		
	Boiler type →	**PX 120**
Diameter air inlet	[mm]	100
Diameter flue outlet	[mm]	100
Diam. roof terminal	[mm]	100
Maximum pipe length **[m]** (total outlet length)	**[m]**	**18**

8.10.4. EXAMPLE D: CONCENTRIC FLUE GAS/AIR SUPPLY PIPE (ROOF-MOUNTED)

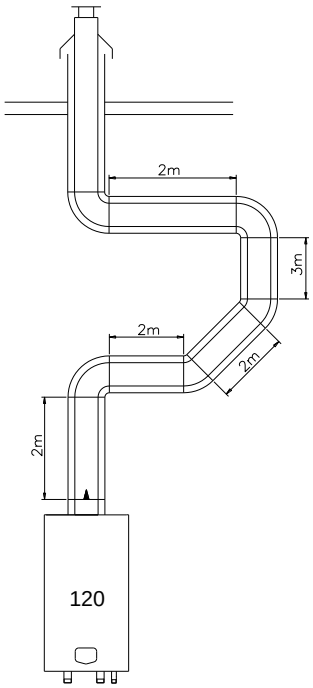

Calculation example with given lengths: checking resistance

Boiler type:		S-CB PX 120 (C33)			
Concentric	**Diameter: 100/150 mm.**		**Number**	**Pa**	**Pa total**
	Straight tube m	total	11	10	110
	Bend	90°	3	13	39
	Bend	45°	2	9	18
	Concentric terminal	roof	1	45	45
	Total resistance flue gas outlet and air supply (concentric):				**212**

The total resistance is more than 160 Pa. This flue gas / air supply system is NOT functional.

8.10.5. EXAMPLE E: CONCENTRIC SYSTEM WALL OUTLET C13(WALL-MOUNTED)

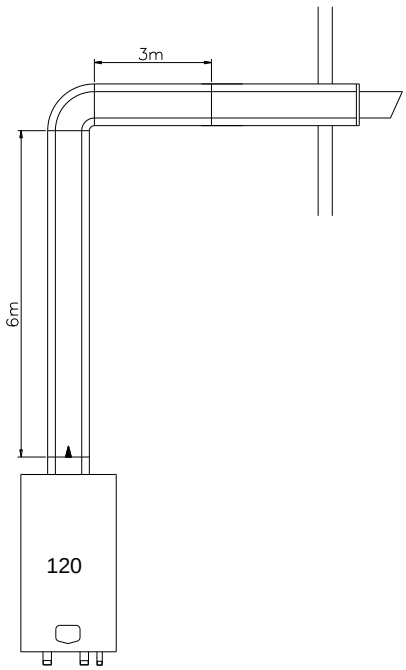

Calculation example with given lengths: checking resistance

Boiler type:		S-CB PX 120			
Concentric	**Diameter: 100/150 mm**		**Number**	**Pa**	**Pa total**
	Straight tube m	total	9	10	90
	Bend	90°	1	13	13
	Concentric terminal	wall	1	24	24
	Total resistance flue gas outlet and air supply (concentric):				**127**

The total resistance is less than 160 Pa. This flue gas / air supply system is functional.

Examples D and E maximum pipe lengths

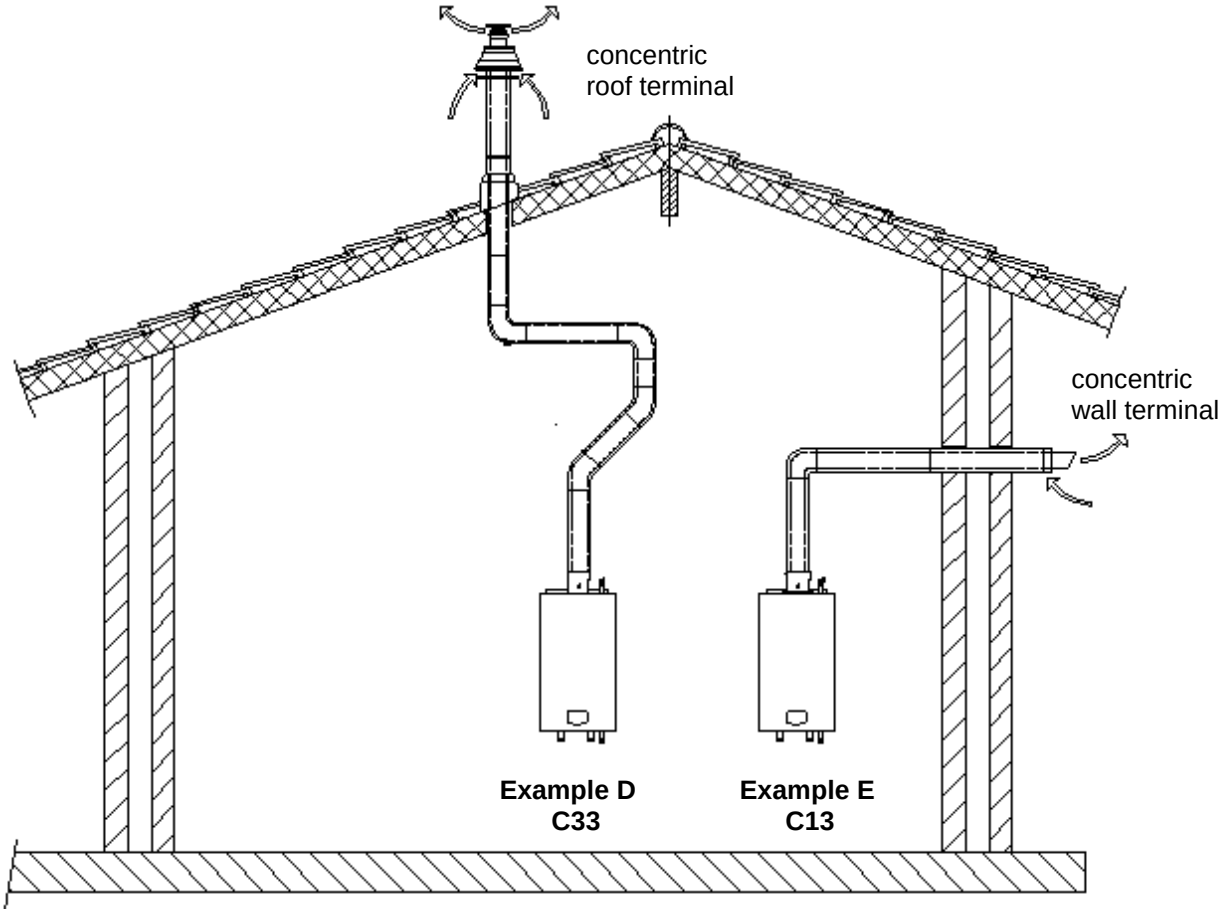

Example D (C33)		
	Boiler type →	PX 120
Diameter concentric pipe	[mm]	100/150
Concentric roof terminal	[mm]	100/150
Maximum pipe length	**[m]**	**5**

Example E (C13)		
	Boiler type →	PX 120
Diameter concentric pipe	[mm]	100/150
Concentric wall terminal	[mm]	100/150
Maximum pipe length	**[m]**	**12,0**

8.10.6. EXAMPLE F: SEPARATE AIR SUPPLY DUCT & FLUE DUCT IN DIFFERENT PRESSURE ZONE (C53)

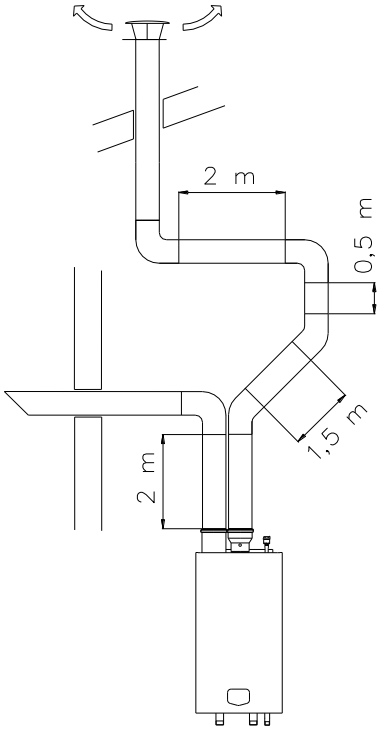

Calculation example with given lengths: checking resistance

Boiler type:		S-CB PX 120			
Flue gas	**Diameter: 100 mm**		**Number**	**Pa**	**Pa total**
	Straight tube m¹	total	6	6,5	39
	Bend	45°	2	3,2	6,4
	Bend	90°	2	6,5	13
	Flue outlet	conical	1	22,1	22,1
	Total resistance flue gas outlet:				**80,5**
Air supply	**Diameter: 100 mm**		**Number**	**Pa**	**Pa total**
	Straight tube m¹	total	2	4,0	8,0
	Bend	90°	1	4,0	4,0
	Air inlet	H/D = 1,0	1	16,7	16,7
	Total resistance air supply:				**28,7**
Total resistance flue gas outlet and air supply:					**109,2 Pa**

The total resistance is less than 160 Pa. This flue gas / air supply system is functional.

Example F (C53)	
Boiler Type →	**PX 120**
Diameter wall terminal [mm]	100
Diameter air inlet [mm]	100
Diameter air inlet/ flue outlet [mm]	100
Diameter roof terminal [mm]	100
Maximum pipe length [m] (inlet + outlet together)	**15**

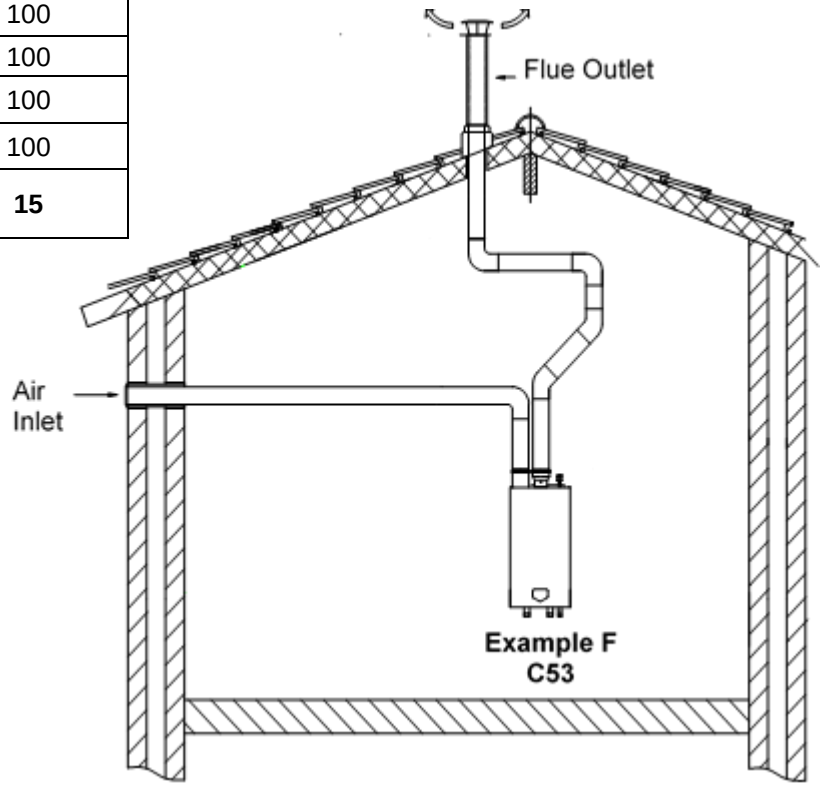

9. ELECTRICAL INSTALLATION

9.1. General

All the wiring is connected by means of screw terminals. The connections are placed on top of the display panel and can be accessed by removing the boiler front door and the connector protection cover.

The boiler pump must be controlled by the Strebel PX 120 boiler control. If, for any reason, an external pump control is applied without written approval, the complete warranty on the boiler and all supplied parts will become invalid.

- For operation, the boiler needs a power supply of 230 Vac 50Hz.
- The boiler connections are not life/neutral sensitive (the boiler is not phase-sensitive).
- The wiring for the connections can be entered at the bottom of the boiler through the cable glands.
- NOTICE: Before starting to work on the boiler, it must be switched off and the power supply to the boiler must be disconnected.
- Electrical wiring should be installed according to all applicable standards and regulations.
- Working on the boiler should only be done by a qualified service engineer that is skilled in working on electrical installations and according to all applicable standards and regulations.

9.2. Electrical connections

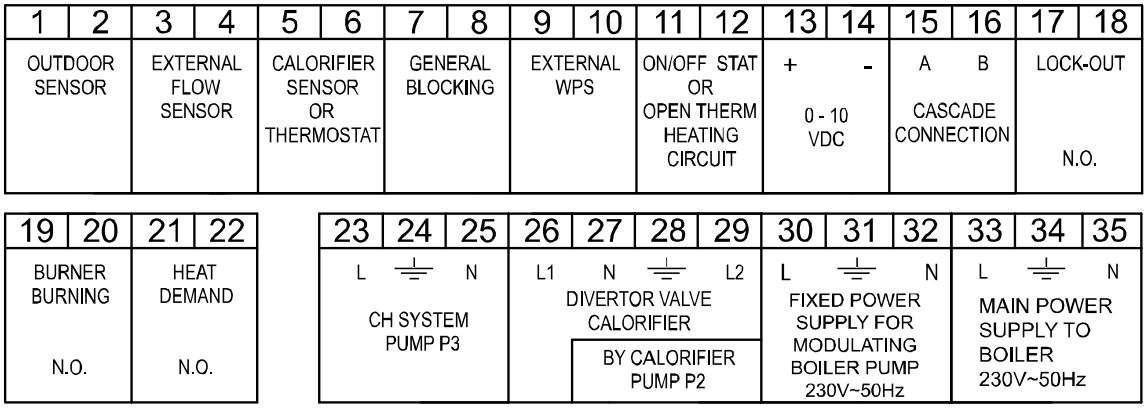

An extensive explanation of the connections and their functions is given in the table in the next section.

9.3. Functions of the connections

1-2	OUTDOOR SENSOR
When an outdoor temperature sensor is connected, the boiler will control the flow water temperature by using a calculated value, which is relative to the outdoor temperature. PARAMETER: No parameter settings needed.	
3-4	**EXTERNAL FLOW SENSOR**
When a low loss header is used, this external flow sensor measures the flow temperature at the system side. The sensor must be mounted on the flow pipe system side, after the low loss header. NOTICE: The sensor is required when several boilers are cascaded with the internal cascade manager. PARAMETER: No parameter settings needed.	
5-6	**CALORIFIER SENSOR or THERMOSTAT**
When an indirect hot water tank / calorifier is installed, a hot water sensor must be connected to these terminals. In case of a DHW heat demand, the set point will be shown in the display. An external on/off thermostat can also be connected to these terminals. When there is heat demand (terminal 5 and 6 are bridged) the flow temperature going to the heating coil(s) will be shown in the display.	

7-8	**GENERAL BLOCKING**
A heat demand that will start the burner will be blocked when terminals 7 and 8 are not bridged. This connection is for the use of external safety devices (terminals must be bridged for allowing burner to fire).	
9-10	**EXTERNAL WATER PRESSURE SWITCH**
A water pressure sensor is mounted in the boiler. As an option, a water pressure switch can be installed. The sensor can be replaced by the water pressure switch, which can be wired to the terminals. When terminals 9/10 are not bridged, the boiler will lock-out. PARAMETER: A parameter change is needed.	
11-12	**ON/OFF STAT OR OPEN THERM HEATING CIRCUIT**
OPTION 1: An ON/OFF thermostat can be connected. The boiler will use the set/programmed flow temperature for the heating system when these terminals 11 and 12 are bridged. OPTION 2: An OpenTherm (OT) controller can be connected to the terminals 11 and 12. The boiler software will detect and use this OpenTherm signal automatically.	
13-14	**0-10 VDC CONTROL SIGNAL**
These terminals are used for an external 0-10 VDC control signal. PARAMETER: A parameter change is needed. NOTICE: Terminal 13 [+] (positive) and Terminal 14 [-] (negative).	
15-16	**CASCADE CONNECTION**
These connections are used when boilers are cascaded with the internal cascade manager for controlling the total cascade. NOTICE: Connect all terminals 15 and all terminals 16 together, do not switch between these terminals.	
17-18	**LOCK-OUT OR PUMP ON/OFF**
This contact is N.O. (normally open). When the unit is in lock-out this contact will close. This contact can also be used for the switching of a pump with a separate control connection, in which case a parameter change is needed.	
19-20	**BURNER BURNING OR EXTRA BOILER OR PUMP ON/OFF**
This contact is N.O. (normally open). When the unit starts the burner, and detects the flame, this contact will be closed. This contact can also be used to control an external (extra) boiler, or for the switching of a pump with a separate control connection. In the latter two cases a parameter change is needed.	
21-22	**BURNER DEMAND OR PUMP ON/OFF**
This contact is N.O. (normally open). When the unit receives any heat demand this contact will close. This contact can also be used for the switching of a pump with a separate control connection, in which case a parameter change is needed.	
23-24-25	**CH SYSTEM PUMP P3**
Connection for a central heating system pump (P3). NOTICE: Nominal pump current of P3 may not exceed 2 A, therefore its power may not exceed 460 W, cf. § 7.2.	
26-27-28-29	**DIVERTOR VALVE CALORIFIER**
When using a calorifier/hot water tank, a 3-way valve or a pump (P2) can be used to divert hot water to the heating coil of the calorifier/tank. This 3-way valve will open, when the hot water storage tank/calorifier has a heat demand. PARAMETER: A parameter change is needed. 26 = L1 wire (heating position); 27 = Neutral wire; 28 = Ground wire; 29 = L2 wire (hot water position). The inrush current of the 3-way valve may not exceed 3 A, see also § 7.2.	
27-28-29	**CALORIFIER PUMP P2**
When using a calorifier/hot water tank, a 3-way valve or a pump (P2) can be used to divert hot water to the heating coil of the calorifier/tank. This pump will start when the hot water storage tank/calorifier creates a hot water demand. PARAMETER: A parameter change is needed. Nominal pump current of P2 may not exceed 2 A, therefore its power may not exceed 460 W, see also § 7.2.	
30-31-32	**FIXED POWER SUPPLY FOR MODULATING BOILER PUMP 230V~50Hz**
Connection for modulating boiler circulation pump (P1). The pump is powered permanently and modulated by the PWM signal of the burner controller.	
33-34-35	**MAIN POWER SUPPLY TO BOILER 230V~50Hz**
The power supply connection of the unit. 33 = Phase wire; 34 = Ground wire; 35 = Neutral wire.	

9.4. Electrical schematics

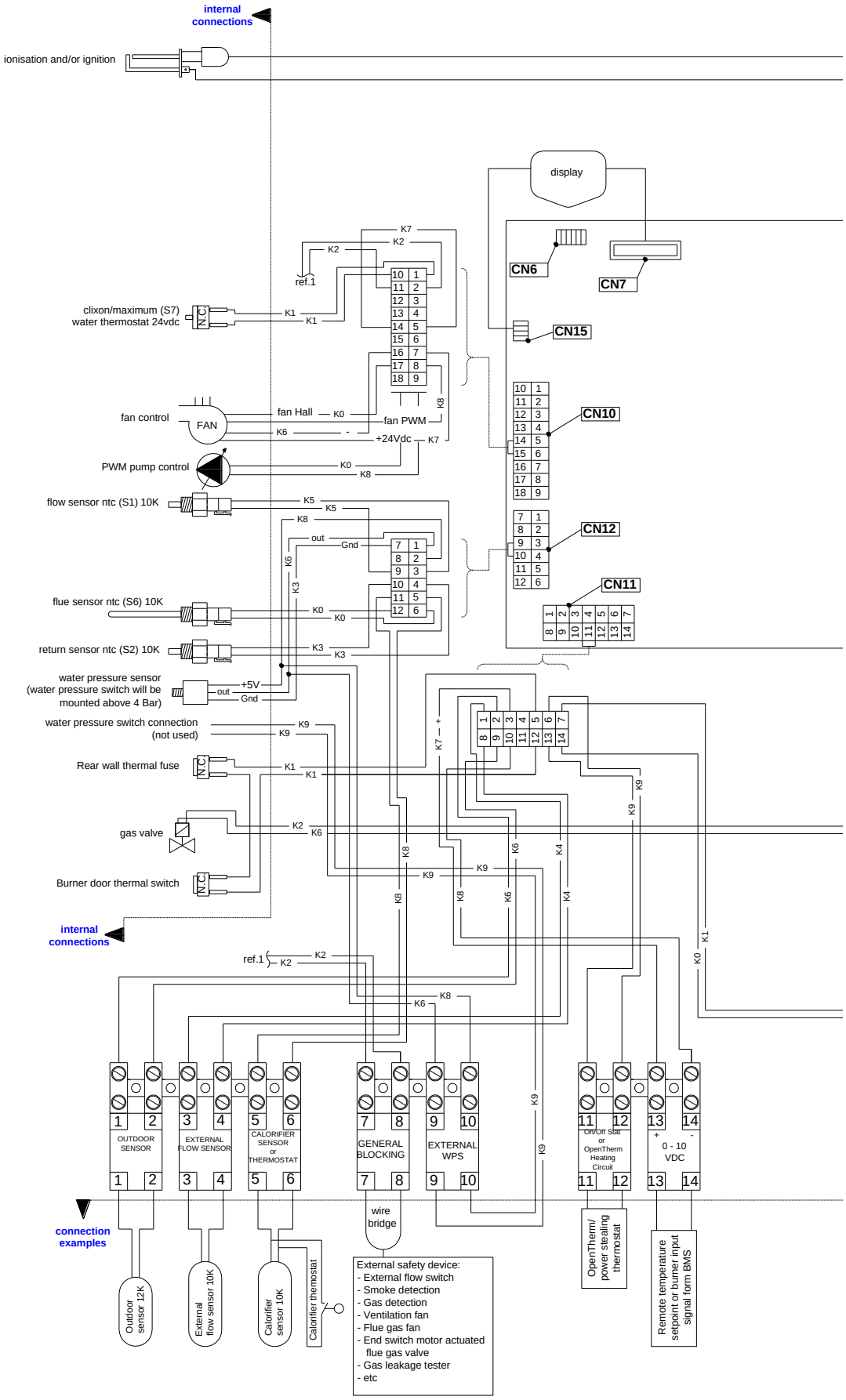

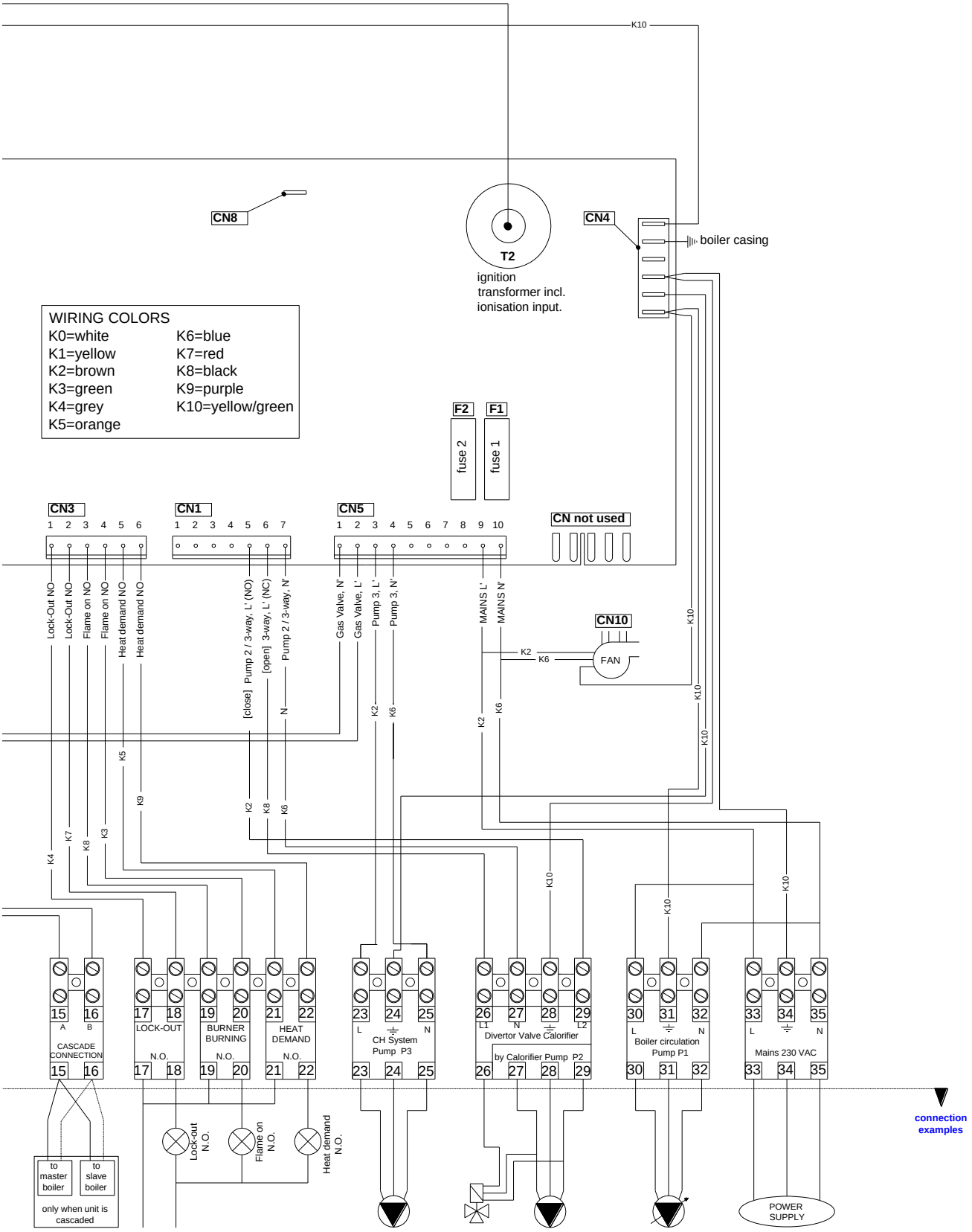
K10
CN8
T2
ignition
transformer incl.
ionisation input.
CN4
boiler casing
WIRING COLORS
K0=white
K1=yellow
K2=brown
K3=green
K4=grey
K5=orange
K6=blue
K7=red
K8=black
K9=purple
K10=yellow/green
F2
F1
fuse 2
fuse 1
CN3
CN1
CN5
CN not used
CN10
FAN
Lock-Out NO
Flame on NO
Heat demand NO
Pump 2 / 3-way, L' (NO)
[close]
[open]
3-way, L' (NC)
Pump 2 / 3-way, N'
Gas Valve, N'
Gas Valve, L'
Pump 3, L'
Pump 3, N'
MAINS L'
MAINS N'
CASCADE CONNECTION
LOCK-OUT
N.O.
BURNER BURNING
HEAT DEMAND
CH System Pump P3
Divertor Valve Calorifier
by Calorifier Pump P2
Boiler circulation Pump P1
Mains 230 VAC
to master boiler
to slave boiler
only when unit is cascaded
Lock-out N.O.
Flame on N.O.
Heat demand N.O.
POWER SUPPLY
connection examples

9.5. Sensor values and conversion tables

SENSOR	SENSOR TYPE	SENSOR VALUE
S1	Internal flow sensor	NTC-10K-B3977
S2	Internal return sensor	NTC-10K-B3977
S3	External flow sensor	NTC-10K-B3977
S4	Calorifier/tank sensor	NTC-10K-B3977
S5	Outdoor sensor	**NTC-12K-B3740**
S6	Flue gas sensor	NTC-10K-B3977

Conversion table: temperature vs. resistance for all sensors with value NTC-10k B3977 (= all sensors except the outdoor sensor).

Temperature (°C)	Resistance (Ω)	Temperature (°C)	Resistance (Ω)	Temperature (°C)	Resistance (Ω)	Temperature (°C)	Resistance (Ω)
-30	175203	20	12488	70	1753	120	387
-25	129289	25	10000	75	1481	125	339
-20	96360	30	8059	80	1256	130	298
-15	72502	35	6535	85	1070	135	262
-10	55047	40	5330	90	915	140	232
-5	42158	45	4372	95	786	145	206
0	32555	50	3605	100	677	150	183
5	25339	55	2989	105	586	155	163
10	19873	60	2490	110	508	160	145
15	15699	65	2084	115	443	165	130

Conversion table: temperature vs. resistance, for the outdoor sensor with value NTC-12k B3740.

Temperature (°C)	Resistance (Ω)	Temperature (°C)	Resistance (Ω)
-50		0	36130
-45		5	28600
-40		10	22800
-35		15	18300
-30	171800	20	14770
-25	129800	25	12000
-20	98930	30	9804
-15	76020	35	8054
-10	58880	40	6652
-5	45950	45	5522

10. USER INTERFACE

10.1. Control panel / display unit

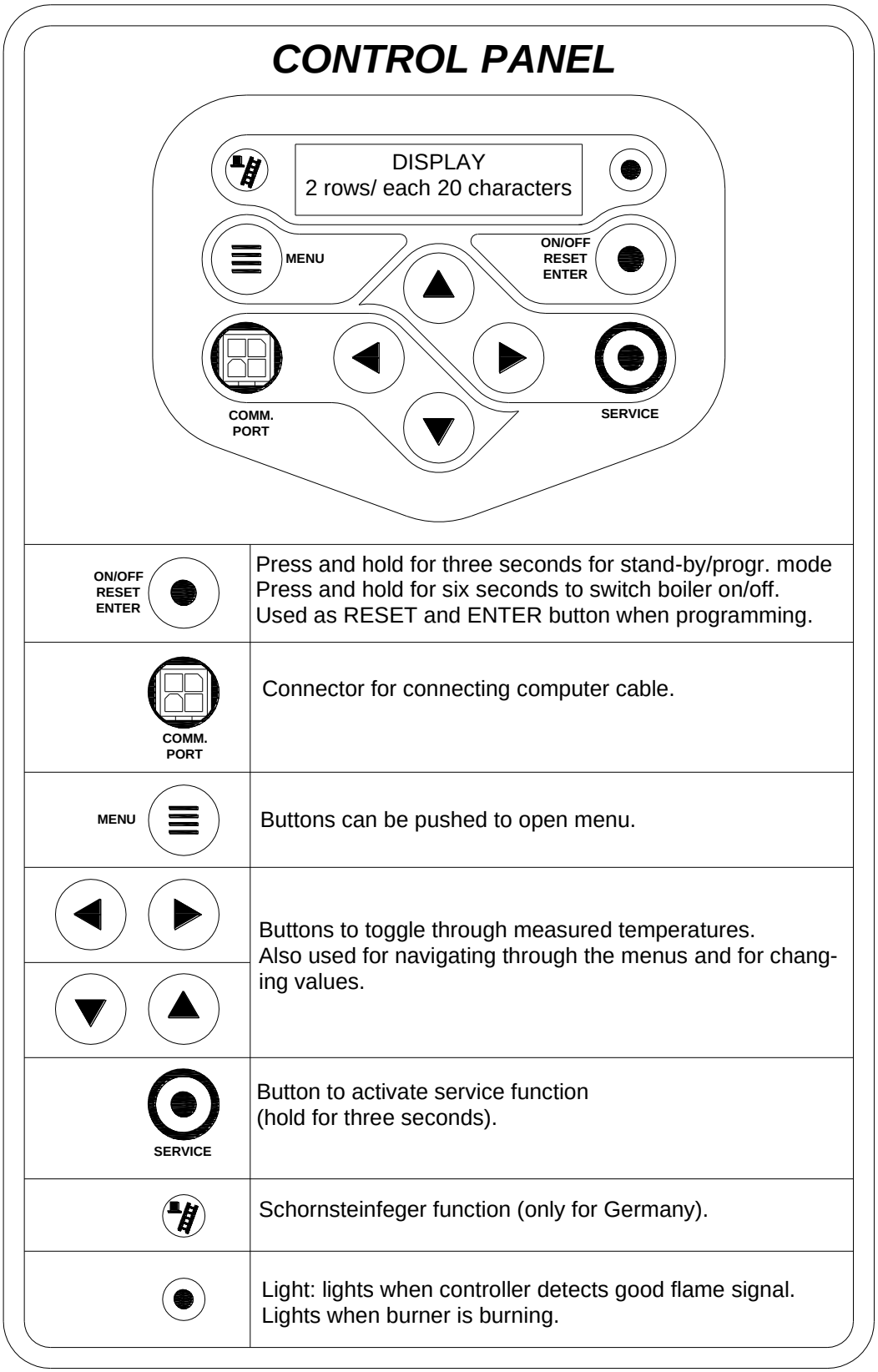

10.2. Control panel menu structure

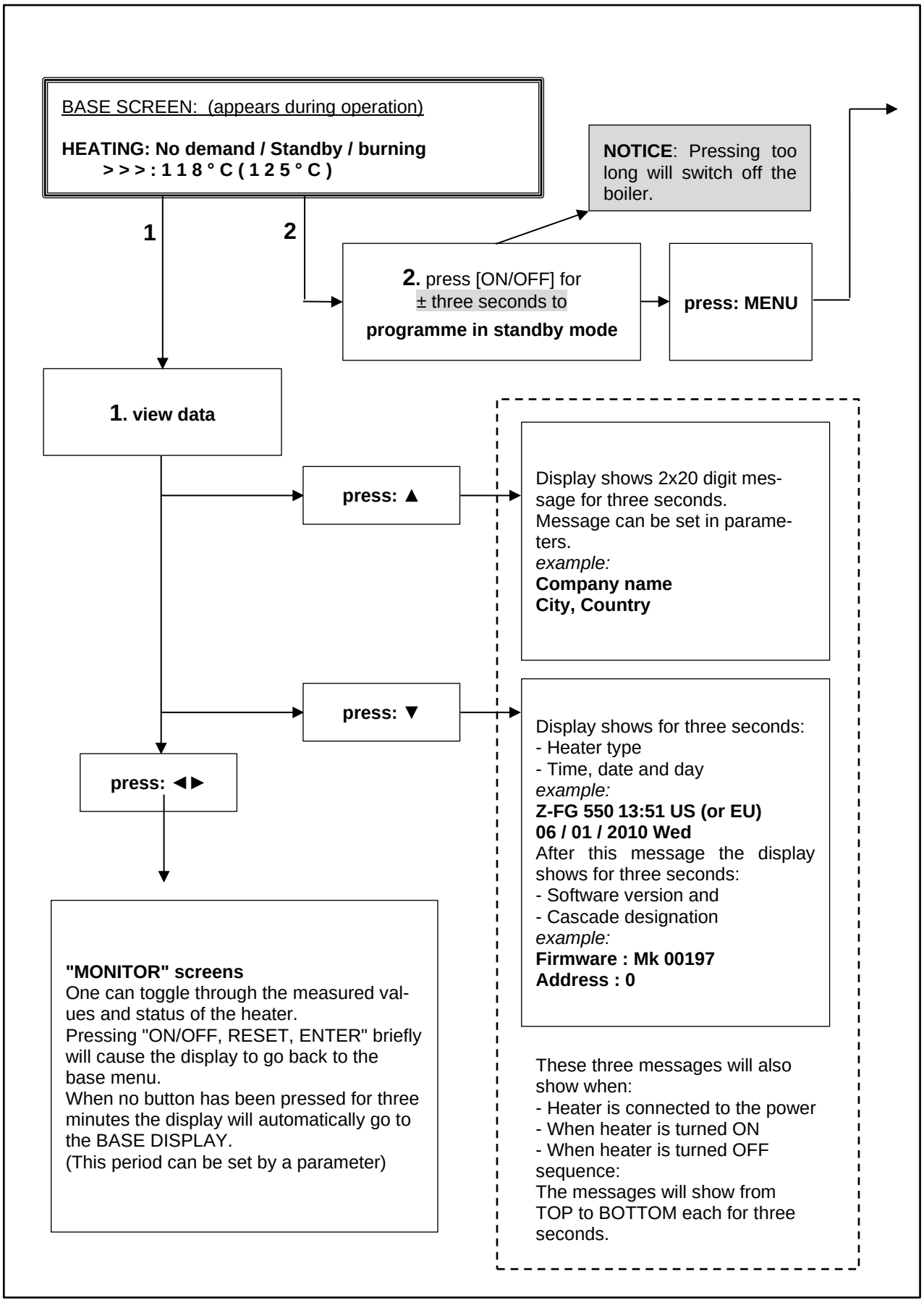

CONFIRMATION CHANGE
When changes have been made in one of the nine menus below, the user presses ENTER to confirm these changes.
To prevent customers making changes by accident, the following happens when changes are made:
Step 1: The user presses [ENTER] to confirm the change made or [MENU] to exit the menu without changes. HINT: First programme all changes planned, then only after that, press [ENTER]
Step 2: The display asks the user to be sure to make these changes. The user can cancel or confirm by using the left and right arrows.

CANCEL = ◄ CONFIRM = ►

By pressing (◄ ►) one can toggle though the available menus.

"TIME/DATE/DAY" menu
In this menu one can set the time and the date.

"SETPOINT" menu
In this menu one can change temperature settings without the need for a password.
- ***Heating set point***
Flow set point when controlling on/off on set flow temp.
- ***Heating reduced***
The amount of degrees diff. relative to "Heating set point" during night reduction.
- ***Parallel shift +/- relative to outdoor curve***
(also in outdoor menu possible)
- ***Hot water set point***
Calorifier or Water heater (depends on heater type)
- ***Hot water reduced***
The amount of degrees diff. relative to "Hot water set point" during night reduction.

"PROGRAM" menu
In this menu one can set the CH, DHW and Anti Legionella program.

"OUTDOOR" menu
In this menu one can set all Outdoor relevant parameters.

"OPERATING HISTORY" menu
Shows burning hours DHW, Heating, etc.

"FAULT HISTORY" menu
press: ▼ Reading last fifteen faults (only reading!).

"MAINTENANCE" menu
By pressing (◄ ►) one can set the following options:
- Maintenance reset
- Maintenance Mode
- All
- Date
- Ignition cycles
- Burning hours
- Mainten Off

"USER LOCK" menu
In this menu one can lock the menu for users
0= UNLOCKED
1= LOCKED
When un-locked, the user can enter the "MENU" by pressing the menu button and all submenus will show.
When locked, the user has to push the: MENU and simultaneously press ▼ for six seconds to get access to all submenus.
This is to prevent accidental changes!
NOTE: The parameters sub menu can always be accessed.

"PARAMETERS" menu
In this menu one can change parameters. The possible access depends on the password that is used.

Enter password

Parameter menu

Enter PW **Level 1:**
three second message confirming access:
LEVEL 1

Enter PW **Level 2:**
three second message confirming access:
LEVEL 2

10.3. Display during operation

During normal operation, the text in the display shows the status of the boiler. In the following graphs the several displays during normal operation are explained.

Display at HEATING DEMAND

Heat demand type:								Actual status:											
H	E	A	T	I	N	G	:	N	o		d	e	m	a	n	d			
>	>	>	:	1	2	3	.	4	°	C	(	1	2	3	.	4	°	C	)
cascade communication indicator				temp. set point							measured temp.control.sens. showing the measured temp. Can be turned off by P5 BJ								

When heat is needed for the calorifier the text "HEATING" changes into "HOTWATR".
When there is no heat demand it always shows heating.

Display at HOT WATER DEMAND

Heat demand type:								Actual status:											
H	O	T	W	A	T	R	:	N	o		d	e	m	a	n	d			
>	>	>	:	1	2	3	.	4	°	C	(	1	2	3	.	4	°	C	)
cascade communication indicator				temp. set point Thermostat > coil flow temp. Sensor > water temp.							measured temp.control.sens. showing the measured temp. Can be turned off by P5 BJ								

Explanation "Actual status" screen

Actual status:
B o i l e r o f f
When boiler is switched off (only text in the display during this status).
N o d e m a n d
No heat demand signal coming from the room thermostat and calorifier sensor (open).
S t a n d - b y
Room thermostat & calorifier sensor/thermostat detect heat demand but set point is reached.
P r e - p u r g e
The fan is purging before a burner start attempt.
P r e - i g n i t i o n
Ignition starts before opening of the gas valve.
I g n i t i o n
The ignitor is igniting.
P o s t - p u r g e
The fan is purging after burner is switched off.
B u r n i n g 1 0 0 %
When the burner is firing, also the actual rpm% is shown.

Explanation "Cascade communication indicator"

NO CASCADE COMMUNICATION

>	>	>	no.1

Always showing the fixed ">>>"

CORRECT CASCADE COMMUNICATION

>		>	no.1
	>		no.2

Showing alternating no.1 & no.2 with 1 second interval.

10.4. Monitor screens

During normal operation and stand-by, the "◄" and "►" buttons can be used to show some boiler information, including measured temperatures, settings and data. In the following graphs is explained which values can be shown in the display. When no button is activated for 2 minutes the display will return to its status display.

Pressing [◄] or [►] while being at the "operating screen" toggles through the screen below.
When pressing [ON/OFF, RESET, ENTER] or [MENU] at any time the display returns to the base menu.

SCREEN: 1		
T1 Flow	123,9°C	Measured value by the internal flow sensor.
T2 Return	123,9°C	Measured value by the internal return sensor.
	Open	Shown when the controller does not detect this sensor.
	Shorted	Shown when sensor wires or sensor itself is shorted.
SCREEN: 2		
T3 External	123,9°C	Measured value by the external sensor.
T4 Calorifi	123,9°C	Measured value by the calorifier sensor.
	Open	Shown when the controller does not detect this sensor.
	Shorted	Shown when sensor wires or sensor itself is shorted.
SCREEN: 3		
T5 Outdoor	123,9°C	Measured value by the outdoor sensor.
T6 Flue	123,9°C	Measured value by the flue gas sensor.
	Open	Shown when the controller does not detect this sensor.
	Shorted	Shown when sensor wires or sensor itself is shorted.
SCREEN: 4		
dTFlowReturn	123,9°C	Temperature difference between internal flow & return.
dTFlueReturn	123,9°C	Temperature difference between flue gas & internal return.
SCREEN: 5		
dTExtReturn	123,9°C	Temperature difference between external & internal return (ΔT LLH).
Signal	Power	External supplied 0-10 Volt dc signal.
	Setpoi	"Power" = power input control or "Setpoi" = set point control.
SCREEN: 6		
Fan speed	9999 rpm	Actual fan speed in rpm.
Fan speed	100%	Actual fan speed % of maximum allowable fan speed.

The maximum actual rpm may be lower than the maximum rpm set point. The fan may not be able to reach the maximum rpm set point, because of the unit's resistance, which is still correct according to its design.

SCREEN: 7		
Flamesignal	100 µA	Flame signal given in µA.
WaterPressur	1,0 bar	Shows water pressure when sensor is connected.
SCREEN: 8		
Pump1 Heater	Off	Pump 1 (HEATER PUMP) on or off.
Pump1 Signal	100%	Modulating signal Pump 1 in (%).
SCREEN: 9		
Pump2 Calori	Off	Shows when the calorifier pump is "ON" or "OFF".
3-way Valve	Heating	Signal to the 3-way valve: "HEATING" or "HOTWATER".
SCREEN: 10		
Pump3 System	Off	Shows when the system pump is "ON" or "OFF".
hh:mm DD/MM/YYYY	Day	hh=hour; mm=minutes; DD=day; MM=month; YYYY=yr; day of the week

SCREEN: 11																				
C	a	s	c		D	e	s	i	g	n					0					0 = MASTER, 1 ..... 11 = SLAVES
C	a	s	I	n	f			0	1	2	3	4	5	6	7	8	9	A	B	Displays number, priority and state of cascade boilers.

DESCRIPTION "CASCINFO" Screen 11

Shows the number of boilers connected with the Cascade. The Master/Lead boiler is designated as 0. Slave/Lag boilers will be designated 1, 2, 3, 4, 5, 6, 7, 8, 9, A, B. When a "-" is used instead of a number, then that boiler is either not connected, or in a lockout mode and not available for the Cascade. When an "x" is used instead of a number, then that boiler is connected, but in lockout mode.
When a "d" is used instead of a number, then that boiler is handling a DHW demand.
When the number is flashing, then that boiler is providing heat to the cascade. When the leading boiler is changed according to the set priority change time, then that boiler's address will be shown first in the row of numbers.

Example 1: "3 4 5 - - - - - - 0 1 2"
There are six boilers present and nr. 3 has priority.

Example 2: "3 4 x - - - - - - d 1 2"
There are six boilers present and nr. 3 has priority. Boiler 0 is heating up an indirect DHW tank. Boiler 5 is present, but in a lock-out.

SCREEN: 12																				
C	a	s	c		P	o	w	e	r		9	9	9	%		9	9	9	%	% heat demand of total (cascade) power available (%).
D	u	a	l		B	u	r	n	e	r	:				N	o				One heat exchanger equipped with two burners: "Yes" or "No".

SCREEN: 13																				
M	a	x		T	h	e	r	m						O	p	e	n			Status of the maximum thermostat: "Open" or "Closed".
G	e	n		B	l	o	c	k						C	l	o	s	e	d	Status of the general blocking contact: "Open" or "Closed".

SCREEN: 14*																				
S	i	p	h	o	n		p	r	e	s	s			C	l	o	s	e	d	Status of the siphon pressure switch: "Open" or "Closed".
N	R	V		C	o	n	t	a	c	t				O	p	e	n			Status of the non-return valve contact: "Open" or "Closed".

* REMARK at screen 14: No Siphon pressure switch and NRV used in this type of boiler.

10.5. Service function

The following graphs describe how to use the service function.

Operating screen:

H	E	A	T	I	N	G	:	S	T	A	N	D	-	B	Y			
>	>	>	:	1	2	3	.	4	°	C	(	1	2	3	.	4	°	C	)

Press [SERVICE] and hold for 3 seconds.
The burner will start and show the display below.

Operating screen:

H	E	A	T	I	N	G	:	S	e	r	v	i	c	e			2	6	%
>	>	>		9	0	.	0	°	C		(		6	0	.	0	°	C	)

"HEATING": It is a boiler for heating.
"Service": It is operating in service mode.
"26%": The burner is firing at 26%.
"90,0°C": Max. allowable water temp. during service.
"60,0°C": Actual measured water temp. (when P5BJ active).

- Press [SERVICE] to exit. The unit will go to the operating screen.
  Press 3 s. [ON/OFF] to exit. The unit will be switched off.
- By using the [▲] & [▼] buttons the burner firing rate percentage can be changed.
- Press [MENU] to access the main menu.
  Press [MENU] to return to the service menu.
- Use [◄] & [►] buttons to browse through the monitor screens.
  Press [MENU] to go to the operation menu of the service mode.
- Press [SERVICE] to exit the service mode.
  The unit will return to the standard operation display.

10.6. Schornsteinfeger function

The following graphs describe how to use the Schornsteinfeger function.
NOTICE: This function is required for Germany and can be activated by parameter (P5 BK). The standard factory setting for this function is “OFF”.

The purpose of this function is to have an easy interface for the "Schornsteinfegers" in Germany, to be able to do their required testing on the boiler. This is a simplified function similar to the normal service function of the boiler.

When the "Schornsteinfeger" button is pressed for 3 seconds:
the heater will fire at **minimum firing rate (%)**
In this state the display shows:

F	**l**	**u**	**e**		**s**	**e**	**r**	**v**	**i**	**c**	**e**		**m**	**o**	**d**	**e**		
P	**o**	**w**	**e**	**r**		**:**		**M**	**i**	**n**	**i**	**m**	**u**	**m**				

When the button is pressed (briefly) again:
the heater will fire at **50% firing rate**
In this state the display shows:

F	**l**	**u**	**e**		**s**	**e**	**r**	**v**	**i**	**c**	**e**		**m**	**o**	**d**	**e**		
P	**o**	**w**	**e**	**r**		**:**		**5**	**0**	**%**								

When the button is pressed (briefly) again:
the heater will fire at **maximum firing rate (%)**
In this state the display shows:

F	**l**	**u**	**e**		**s**	**e**	**r**	**v**	**i**	**c**	**e**		**m**	**o**	**d**	**e**		
P	**o**	**w**	**e**	**r**		**:**		**M**	**a**	**x**	**i**	**m**	**u**	**m**				

When the button is pressed briefly again:
the heater will return to the normal operation mode.
The "Schornsteinfeger" function is switched off.

NOTES:

When the heater is burning during Schornsteinfeger function (when top display line shows "Flue service mode") and no button is pressed for 12 minutes, the boiler will return automatically to normal operation mode. The "Schornsteinfeger" function will be switched off.
The "Schornsteinfeger function" can be activated for the user by programming a parameter (P5 BK).
All regular temperature safety controls remain active and the boiler/water heater pump and the system pump are running.

10.7. *Programming in standby mode*

Standby
Use the standby mode for modifying boiler settings without interaction with the boiler control. Changes are effectuated by leaving standby mode.

Properties of standby mode:

- Keys are active and the menu is accessible.
- Burner does NOT respond to an external heat demand.
- All control functions are active: pumps, fans and cascade are operational, recirculation and frost protection are working.

How to programme the boiler:

- First disconnect or shut down the room thermostat and/or other external controllers from the boiler. The CH pump and fan will stop after a short delay time.
- Switch the boiler in standby mode by pressing [ON/OFF] for three seconds.
- The next display screen should appear:

Display message	H	E	A	T	I	N	G	:	b	o	i	l	e	r		o	f	f		
	>	>	>	:	1	2	3	.	4	°	C	(	1	2	3	.	4	°	C	)

- Program the boiler at the control panel (see the following sections).
- Terminate programming mode by pressing [MENU], or [ENTER] and NO ◄ or YES ►.

Reactivate the boiler by pressing [ON/OFF] for three seconds again.

10.8. *Setting the time & date*

The following graphs describe how to program the time and date of the unit.

Operating screen:

H	E	A	T	I	N	G	:	b	o	i	l	e	r		o	f	f		
>	>	>	:	1	2	3	.	4	°	C	(	1	2	3	.	4	°	C	)

▼

Press [MENU]

▼

Main menu screen:

M	a	i	n		M	e	n	u											
C	l	o	c	k															

▼

The display shows "CLOCK" press [ENTER]

▼

Setting Time and Date:

S	e	t		t	i	m	e	/	d	a	t	e		0	8	:	3	3	
3	0	/	0	3	/	2	0	1	0		T	u	e						

▼

The day is now blinking/selected and can be changed.
Use [▲]& [▼] to change the value.
Use [◄] & [►] to select another value.

▼

Press [ENTER] for the confirmation screen after all changes are done.

▼

Confirmation screen:

A	r	e		y	o	u		s	u	r	e								
<	C	a	n	c	e	l	;		>	C	o	n	f	i	r	m			

Press [◄] to cancel the changes made (display goes back to operating screen).

Press [►] to confirm the changes made. The time and day will start blinking for a few seconds. After this, the display returns to its operating screen.

10.9. *Set points*

The following graphs describe how to program the heating and hot water set points. NOTICE: The hot water set points are only displayed, when the boiler is programmed as an indirect hot water boiler or direct hot water boiler. See parameter P4 AA for the exact boiler configuration.

Operating screen:

```
HEATING:boiler off
>>>:123.4°C(123.4°C)
```

Press [MENU]

Main menu screen:

```
Main Menu
Setpoints
```

Select "Set points" using [◄] & [►] and press [ENTER]

By pressing [◄] & [►] the following screens can be selected.

By pressing [▲] & [▼] the blinking values in the selected screen can be changed.

Press [MENU] to exit. The unit will reset and return to the operating screen.

Press [ENTER] for confirmation screen when all the changes are made.

Confirmation screen:

```
Are you sure
< Cancel; > Confirm
```

Press [◄] to cancel the changes made (unit will reset).

Press [►] to confirm the changes. The value set in the screen when pressing enter will be shown for a few seconds. After this the display returns to the normal operating screen.

Heating set point normal/day time:

```
Heating setpoint
  80 °C
```

The flow temperature set point that will be active during the programmed CH periods.

Heating night shift related to the normal/day time set point:

```
CH Night shift
 -10 °C
```

The reduction of the normal/day time set point. This reduction is used outside the programmed CH periods.
Parameter P6 BB.

Heating parallel shift:

```
Heating Par shift
   5 °C
```

Setting the parallel shift of the heating curve related to the outdoor temperature control (parameter P6 BC).

DHW set point normal/day time: **(parameter P4 AA = 1/2)**

D	**H**	**W**		**s**	**e**	**t**	**p**	**o**	**i**	**n**	**t**							
		6	**0**		**°**	**C**												

This is the water temperature set point that is active during the programmed DHW periods (parameter P4 AA = 1/2).

DHW set point reduction: **(parameter P4 AA = 1/2)**

D	**H**	**W**		**R**	**e**	**d**	**u**	**c**	**e**									
		1	**0**		**°**	**C**												

The reduction of the DHW set point related to normal/day time set point. This reduction is used outside the programmed DHW periods (parameter P4 AA = 1/2).

NOTICE:
The maximum actual DHW temperature will never exceed the value set at "Heating Setpoint" regardless the set DHW setpoint.
If higher DHW setpoints are needed the Heating Setpoint has to be set higher also.

10.10. Setting the timer programs

Three different programs can be set with the boiler, these are:

- CH program
- DHW program
- Anti-Legionnaires' disease (pasteurisation) program

HEATING PROGRAM

Three programmed periods each day can be set (period 1, period 2 and period 3). During these periods, the unit will use the normal CH and DHW set point. Outside the programmed period(s) the unit will use the reduced temperature as set point. When there is no time programmed for a period, it will not be used.
(Example: no time programmed in period 3 on Monday > **"Mon 3 --:-- ---:--"**).

Operating screen:

H	E	A	T	I	N	G	:	b	o	i	l	e	r		o	f	f		
>	>	>	:	1	2	3	.	4	°	C	(	1	2	3	.	4	°	C	)

Press [MENU]

Select "Timer" using [◄] & [►] and press [ENTER]

Main menu screen:

M	a	i	n		M	e	n	u											
T	i	m	e	r															

Press [ENTER]

Setting CH program times:

P	r	o	g	r	a	m		C	H										
M	o	n		1		0	6	:	0	0		-	2	3	:	0	0		

Press [►] to browse through the values that can be set at the bottom line. The blinking value can be changed.

Press [▲] & [▼] to change the selected (blinking) value.

Press [ENTER] for confirmation screen when all settings are done.

Confirmation screen:

A	r	e		y	o	u		s	u	r	e								
<		C	a	n	c	e	l	;		>		C	o	n	f	i	r	m	

Press [◄] to cancel the changes made (unit will reset).

Press [►] to confirm the changes. The last alternation will be blinking for a few seconds and return to base menu.

Press [MENU] to exit. The boiler will reset and go to the operating screen.

Press [◄] for next SCREEN

Copy programmed day for CH:

C	o	p	y		f	r	o	m	:		C	H					M	o	n
C	o	p	y		t	o	:		C	H							T	u	e

Press [►] to switch between "Copy from" and "Copy to". The blinking day is selected and can be changed.

Press [▲] & [▼] to change the selected (blinking) value.

Press [ENTER] for confirmation screen when all settings are done.

Confirmation screen:

A	r	e		y	o	u		s	u	r	e								
<		C	a	n	c	e	l	;		>		C	o	n	f	i	r	m	

Press [◄] to cancel the changes made (unit will reset).

Press [►] to confirm the changes. The two days will blink for a moment.

Press [MENU] to exit. The boiler will reset and go to the operating screen.

Press [◄] for next SCREEN

> > > Continue on next page HOT WATER program < < <

HOT WATER PROGRAM

> > > From previous page with HEATING part < < <

Setting DHW program times:

P	r	o	g	r	a	m		D	H	W									
M	o	n		1		0	6	:	0	0		-	2	3	:	0	0		

Press [►] to browse through the values that can be set at the bottom line. The blinking value can be changed.

Press [▲] & [▼] to change the selected (blinking) value.

Press [ENTER] for confirmation screen when all settings are done.

Confirmation screen:

A	r	e		y	o	u		s	u	r	e								
<		C	a	n	c	e	l	;		>		C	o	n	f	i	r	m	

Press [◄] to cancel the changes made (unit will reset).

Press [►] to confirm the changes. The last alternation will be blinking for a few seconds and return to base menu.

Press [MENU] to exit. The boiler will reset and go to the operating screen.

Press [◄] for next SCREEN

Copy programmed day for DHW:

C	o	p	y		f	r	o	m	:		D	H	W				M	o	n
C	o	p	y		t	o	:		D	H	W						T	u	e

Press [►] to switch between "Copy from" and "Copy to". The blinking day is selected and can be changed.

Press [▲] & [▼] to change the selected (blinking) value.

Press [ENTER] for confirmation screen when all settings are done.

Confirmation screen:

A	r	e		y	o	u		s	u	r	e								
<		C	a	n	c	e	l	;		>		C	o	n	f	i	r	m	

Press [◄] to cancel the changes made (unit will reset).

Press [►] to confirm the changes. The two days will blink for a moment.

Press [MENU] to exit. The boiler will reset and go to the operating screen.

Press [◄] for next SCREEN

> > > Continue on next page LEGIONELLA program < < <

ANTI LEGIONNAIRES' DISEASE PROGRAM

The anti-Legionnaires' disease (pasteurisation) program of the boiler can only be used when the boiler is set as an "indirect" boiler configuration or a "direct" hot water boiler configuration. Only these configurations can activate the day and time program of the anti-Legionnaires' disease function. See the following graphs. The standard factory setting for this function is "OFF".

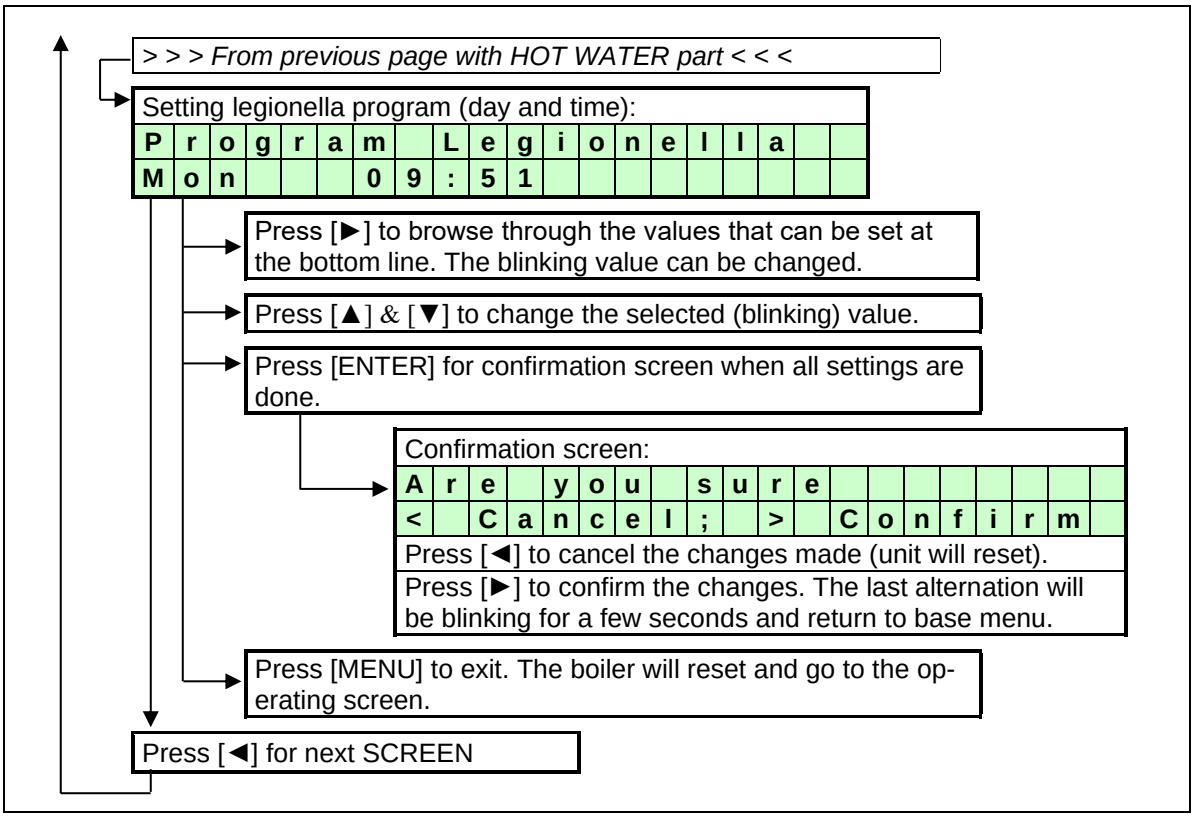

10.11. Setting the outdoor specifications

PARAMETERS FOR SETTING THE OUTDOOR GRAPH

When using this function, the flow temperature is calculated based on the measured outdoor temperature. The relation between the outdoor temperature and the flow temperature can be programmed with the following parameters. This setting creates the so called "heating curve".

The boiler will recognise an outdoor sensor when it is connected. When the sensor is detected the boiler controller will control the flow temperature based on the heating curve that is programmed.

P5 AA OutsidPres. (1=On 0=Off)

Outside sensor present.
Setting this parameter to "On" a fault message will be displayed in case of an interrupted connection to the outdoor sensor or if the measured outdoor temperature exceeds 60°C (defective sensor).
0 => No fault message at interrupted outdoor sensor connection. Boiler keeps burning using the value of the external or internal flow sensor instead of the outdoor sensor.
1 => Interrupted sensor wiring causes a fault message to occur at the display Boiler keeps burning using the value of the external or internal flow sensor instead of the outdoor sensor.

OUTDOOR GRAPH (see also next page)

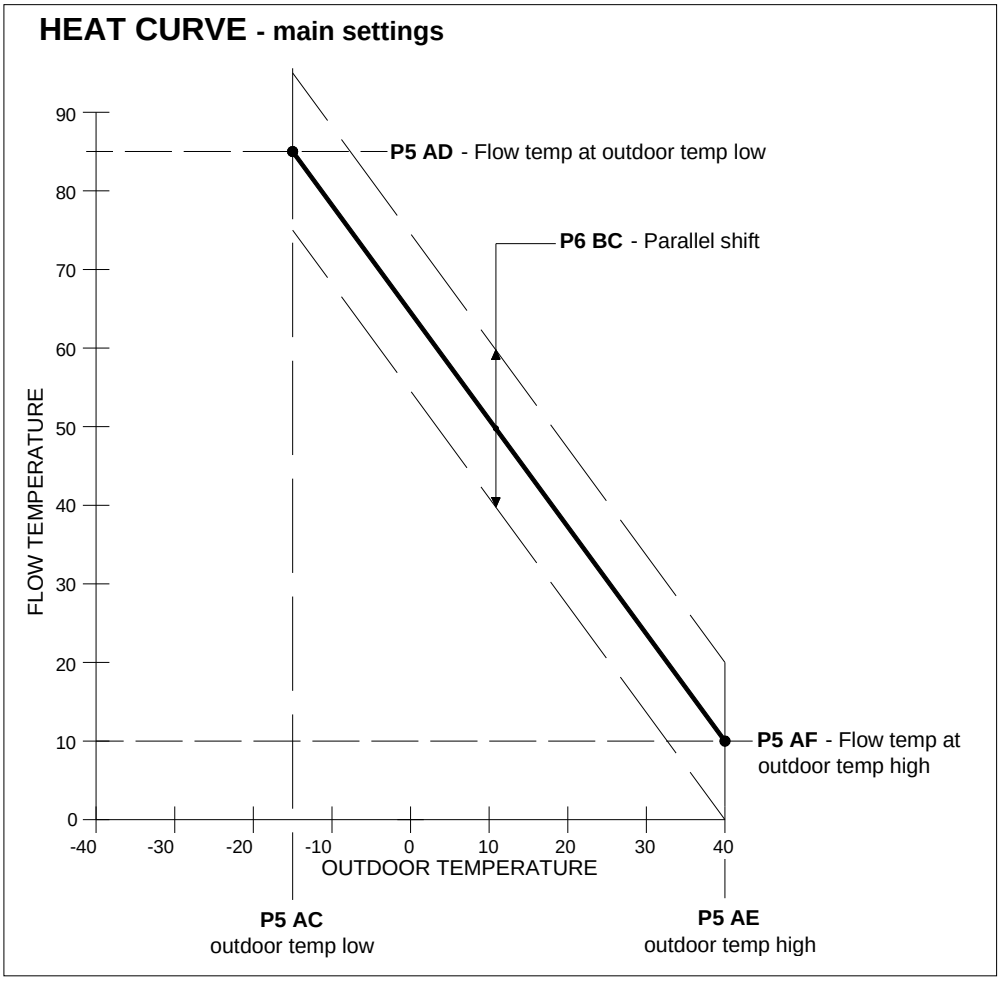

Curve and values only for illustration purposes, programmed parameter values can deviate!

P5 AC Heat curve minimum outdoor temperature °C
This sets the minimum outdoor temperature at which one wants the maximum flow temperature that is set.

P5 AD Heat curve flow temperature at minimum °C
This sets the desired maximum flow temperature at the set minimum outdoor temperature.

P5 AE Heat curve maximum outdoor temperature °C
This sets the maximum outdoor temperature at which one wants the minimum flow temperature that is set.

P5 AF Heat curve flow temperature at maximum °C
This sets the desired minimum flow temperature at the set maximum outdoor temperature.

P6 BC Heat curve Parallel Shift °C
The heating curve is set by the parameters. Next to these setting done by the installer, the end user has the freedom to influence the flow temperature by doing a parallel shift setting. In this parameter the margins are set within which the user can increase and decrease the calculated flow temperature relative to the calculated flow temperature by the heating curve that is set.

is continued →

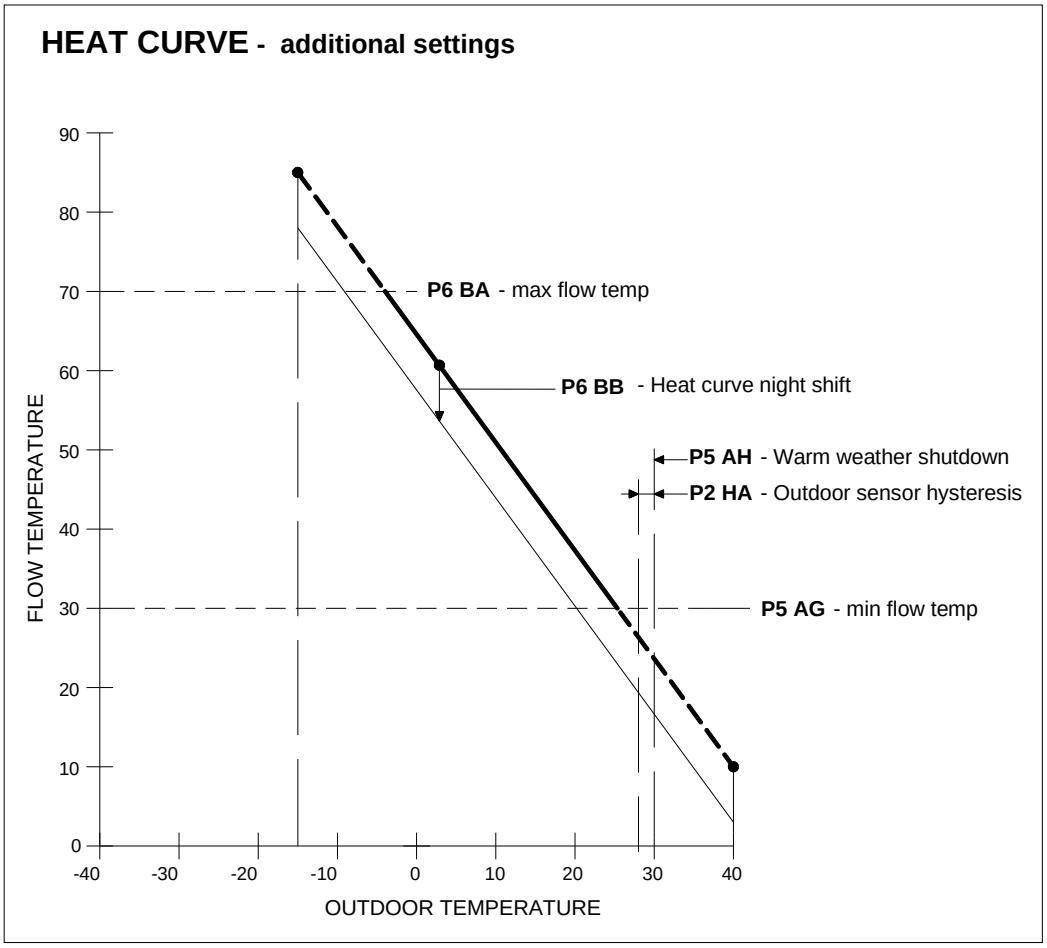

Curve and values only for illustration purposes, programmed parameter values can deviate!

P5 AG Heat curve minimum flow temperature °C
The set point will never be lower than the flow temperature set in parameter P5AG. The minimum temperature is limited, even if the calculated set temperature, according to the heating curve, would be lower.

P5 AH Summer Outdoor Temperature Central heating °C
If the outdoor temperature is higher than set in P5AH the heat demand for heating will be blocked.

P5AR Outdoor sensor 10K or 12K resistance (1 or 0)
Depending to the used type of sensor this parameter can be set. Set to ‘0’ when using a so called 12k NTC sensor (sensor resistance is 12 kohm at 25°C) Set to ‘1’ when using a so called 10k NTC sensor (sensor resistance is 10 kohm at 25°C) Default the parameter = 0, so the used sensor is assumed to be 12 kΩ.

P2 HA Outdoor sensor hysteresis °C
If the outdoor temperature reaches the temperature set in P5 AH (warm weather shutdown) the unit won’t start for heating. If the measured outdoor temperature drops P5 AH minus P2 HA the boiler can start up for heating again.

P6 BA CH User Setting °C
The set point will never be higher than the flow temperature set in parameter P6BA. The maximum temperature is limited, even if the calculated set temperature, according to the heating curve, would be higher.

P6 BB Heat curve night shift °C
The temperature reduction during the night, relative to the setting determined by the heat curve

DISPLAY

The following graphs describe how to program the outdoor graph settings.

Operating screen:

H	E	A	T	I	N	G	:	b	o	i	l	e	r		o	f	f		
>	>	>	:	1	2	3	.	4	°	C	(	1	2	3	.	4	°	C	)

Press [MENU]

Select "Outdoor" using [◀] & [▶] and press [ENTER]

Main menu screen:

M	a	i	n		M	e	n	u											
O	u	t	d	o	o	r													

Press [◀] & [▶] to browse through the screens that are shown below.
Press [▲] [▼] to change the blinking value in the selected screen.
Press [MENU] to exit. The unit will reset and go to the operating screen.
Press [ENTER] for confirmation screen after all changes are made.

Confirmation screen:

A	r	e		y	o	u		s	u	r	e								
<		C	a	n	c	e	l	;		>		C	o	n	f	i	r	m	

Press [◀] to cancel the changes made (unit will reset).
Press [▶] to confirm the changes made. The time and day will start blinking for a few seconds. After this, the display returns to its operating screen.

	0	1				O	u	t	s	i	d	P	r	e	s					P5 AA
											0									

	0	2				H	C	m	i	n	O	u	T	m	p					P5 AC
									-	1	5		°	C						

	0	3				H	C	m	i	n	F	l	T	m	p					P5 AD
										8	5		°	C						

	0	4				H	C	m	a	x	O	u	T	m	p					P5 AE
										2	0		°	C						

	0	5				H	C	m	a	x	F	l	T	m	p					P5 AF
										2	0		°	C						

	0	6				H	C	m	i	n	F	l	L	i	m					P5 AG
										2	0		°	C						

	0	7				S	u	m	S	h	D	w	n	O	u					P5 AH
										3	0		°	C						

	0	8				H	C	m	a	x	F	l	L	i	m					P6 BA
										8	5		°	C						

	0	9				H	C	n	g	h	t	s	h	f	t					P6 BB
									-	1	0		°	C						

	0	A				H	C	p	a	r	a	s	h	f	t					P6 BC
											5		°	C						

	0	B				O	u	t	S	1	2	k	1	0	k					P5 AR
											0									

10.12. *Checking the operating history*

The following graphs describe how to check the operating history of the boiler.

Operating screen:

H	E	A	T	I	N	G	:	b	o	i	l	e	r		o	f	f		
>	>	>	:	1	2	3	.	4	°	C	(	1	2	3	.	4	°	C	)

Press [MENU]

Select "Operate" using [◀] & [▶] and press [ENTER]

Main menu screen:

M	a	i	n		M	e	n	u											
O	p	e	r	a	t	e													

Press [◀] & [▶] to browse through the 5 screens.

Press [MENU] or [ENTER] to exit. The unit will return to the operating screen.

SCREEN: 1

O	p	e	r	a	t	i	n	g		h	i	s	t	o	r	y			
P	o	w	e	r	O	n			h	r	s			1	3	1	4	0	0

Top line: Shows the operating history menu is activated.

Bottom line: Total hours the boiler is connected to power supply and switched on.

SCREEN: 2

h	r	s	C	h			T	o	t				1	0	0	0	0	0	0
h	r	s	D	h	w		T	o	t				1	0	0	0	0	0	0

Top line: Total burning hours for heating.

Bottom line: Total burning hours for domestic hot water.

SCREEN: 3

h	r	s	C	h				<	5	0	%		1	0	0	0	0	0	0
h	r	s	C	h			=	>	5	0	%		1	0	0	0	0	0	0

Top line: Burning hours for heating while the burner was firing less than 50%.

Bottom line: Burning hours for heating while the burner was firing equal or higher than 50%.

SCREEN: 4

h	r	s	D	h	w		<	5	0	%		:	1	0	0	0	0	0	0
h	r	s	D	h	w	=	>	5	0	%		:	1	0	0	0	0	0	0

Top line: Burning hours for hot water while the burner was firing less than 50%.

Bottom line: Burning hours for hot water while the burner was firing equal or higher than 50%.

SCREEN: 5

T	i	a	1	0	0	0	0	0	F	i	a			1	0	0	0	0	0
S	s	l	1	0	0	0	0	0	S	s	t			1	0	0	0	0	6

Top line: Shows Total Ignition Attempts (**Tia**) & Failed Ignition Attempts (**Fia**)

Bottom line: Shows Soft Starts last (**Ssl**) &
Soft Starts Total (**Sst**)

10.13. Checking the fault history

The following graphs describe how to check the fault history of the boiler.

Operating screen:

H	E	A	T	I	N	G	:	b	o	i	l	e	r		o	f	f		
>	>	>	:	1	2	3	.	4	°	C	(	1	2	3	.	4	°	C	)

Press [MENU]

Select "Faulthist" using [◄] & [►] and press [ENTER]

F	a	u	l	t	h	i	s	t							N	o	.	0	1
2	1	/	0	4	/	2	0	1	0	W	e	d		2	2	:	2	3	A

▲ blinking in turn ▼

S	i	p	h	o	n		S	w	i	t	c	h							
S	v	9	9	9	/	C	U	M	9	9	9	/	R	9	9	9	9	,	5

Press [◄] & [►] to browse through the last 10 faults.

Press [MENU] or [ENTER] to exit. The unit will return to the operating screen.

The fault menu shows the last 10 faults. For each fault the display blinks between the two screens shown above. The top line of the top screen shows the fault number and the bottom line of the top screen shows the date, day and time the fault occurred.

On the top line of the bottom screen the fault type is displayed. The bottom line shows the following:

SV: The total amount of this fault that has occurred after the last time that the service history was erased (after service was done).

CUM: The total amount of this fault. The total amount cannot be erased after service, this shows the fault history of the boiler (electronics) since the start of operation.

R: Shows the elapsed time in hrs between the moment the fault occurred and the moment it was reset.

10.14. Setting the maintenance specifications

The following graphs describe how to check and program the maintenance settings. The standard factory setting for this function is “OFF”.

MAINTENANCE SETTINGS

The unit can be programmed in such a way that an automatic maintenance message is displayed.
There are three options that can be selected. A maintenance message appears after:
* A programmed date is reached.
* An amount of burning hours is reached.
* An amount of ignition cycles is reached.

One single option can be activated or all three options.

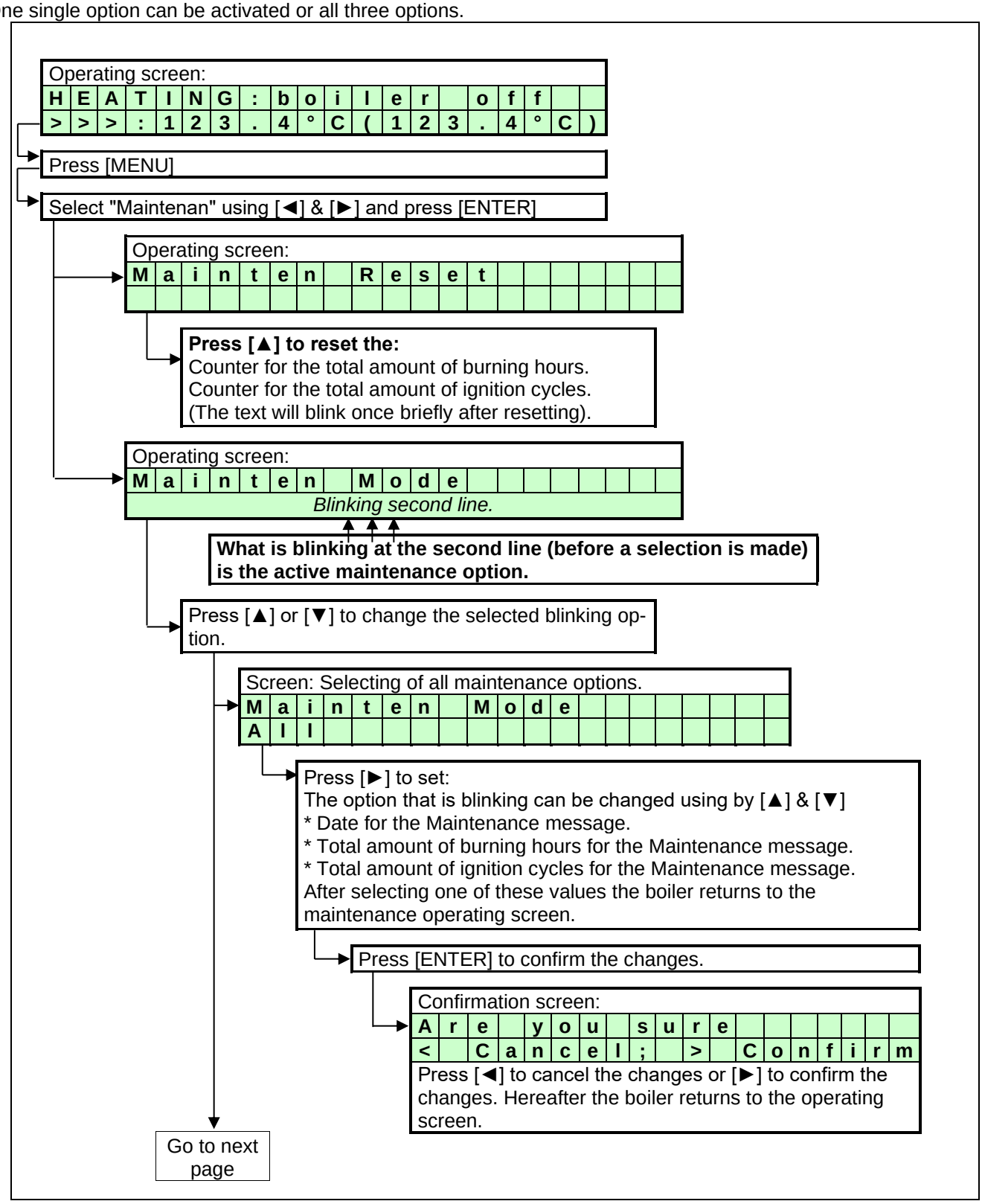

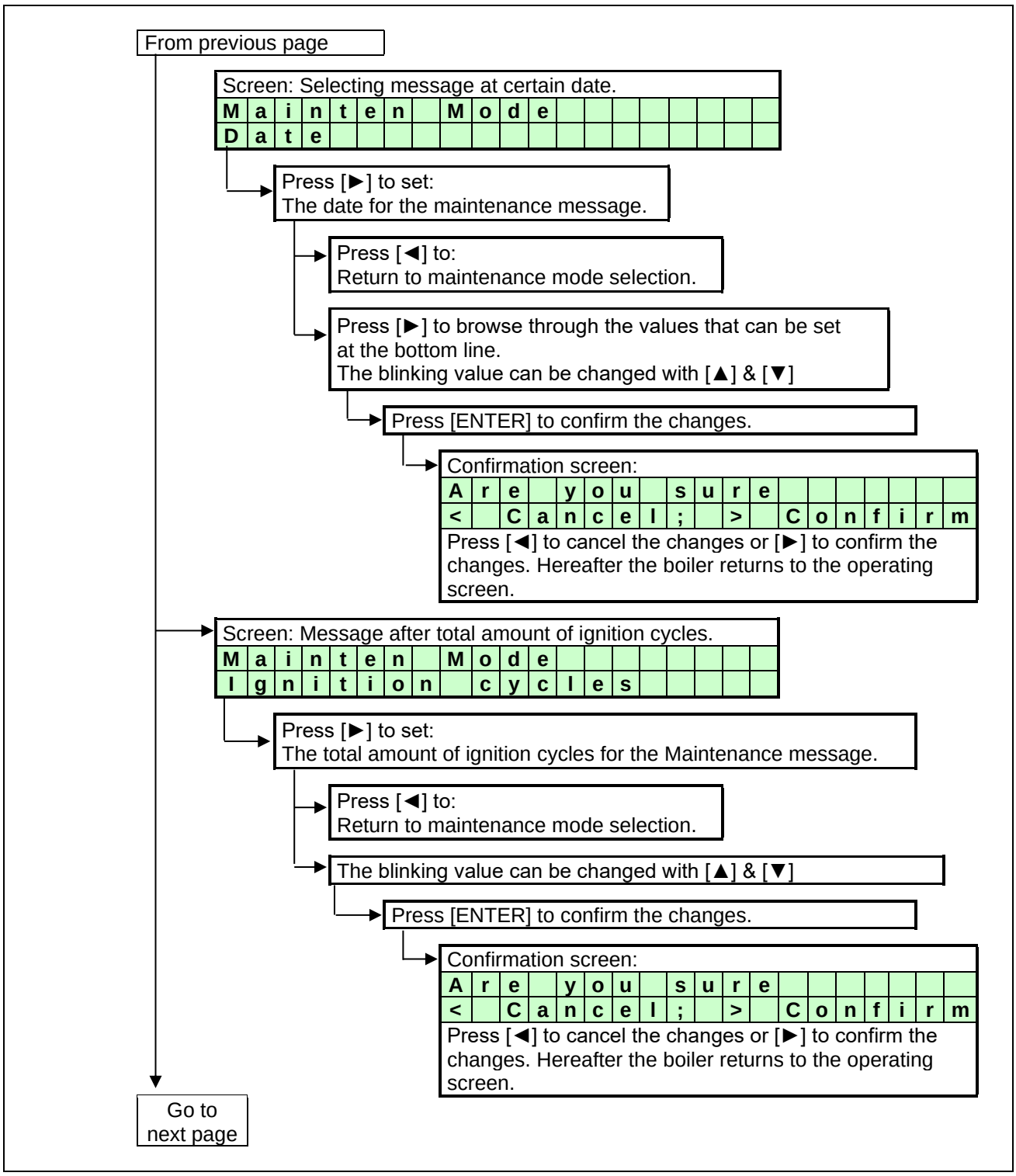
From previous page
Screen: Selecting message at certain date.
Mainten Mode
Date
Press [►] to set:
The date for the maintenance message.
Press [◄] to:
Return to maintenance mode selection.
Press [►] to browse through the values that can be set at the bottom line.
The blinking value can be changed with [▲] & [▼]
Press [ENTER] to confirm the changes.
Confirmation screen:
Are you sure
< Cancel; > Confirm
Press [◄] to cancel the changes or [►] to confirm the changes. Hereafter the boiler returns to the operating screen.
Screen: Message after total amount of ignition cycles.
Mainten Mode
Ignition cycles
Press [►] to set:
The total amount of ignition cycles for the Maintenance message.
Press [◄] to:
Return to maintenance mode selection.
The blinking value can be changed with [▲] & [▼]
Press [ENTER] to confirm the changes.
Confirmation screen:
Are you sure
< Cancel; > Confirm
Press [◄] to cancel the changes or [►] to confirm the changes. Hereafter the boiler returns to the operating screen.
Go to next page

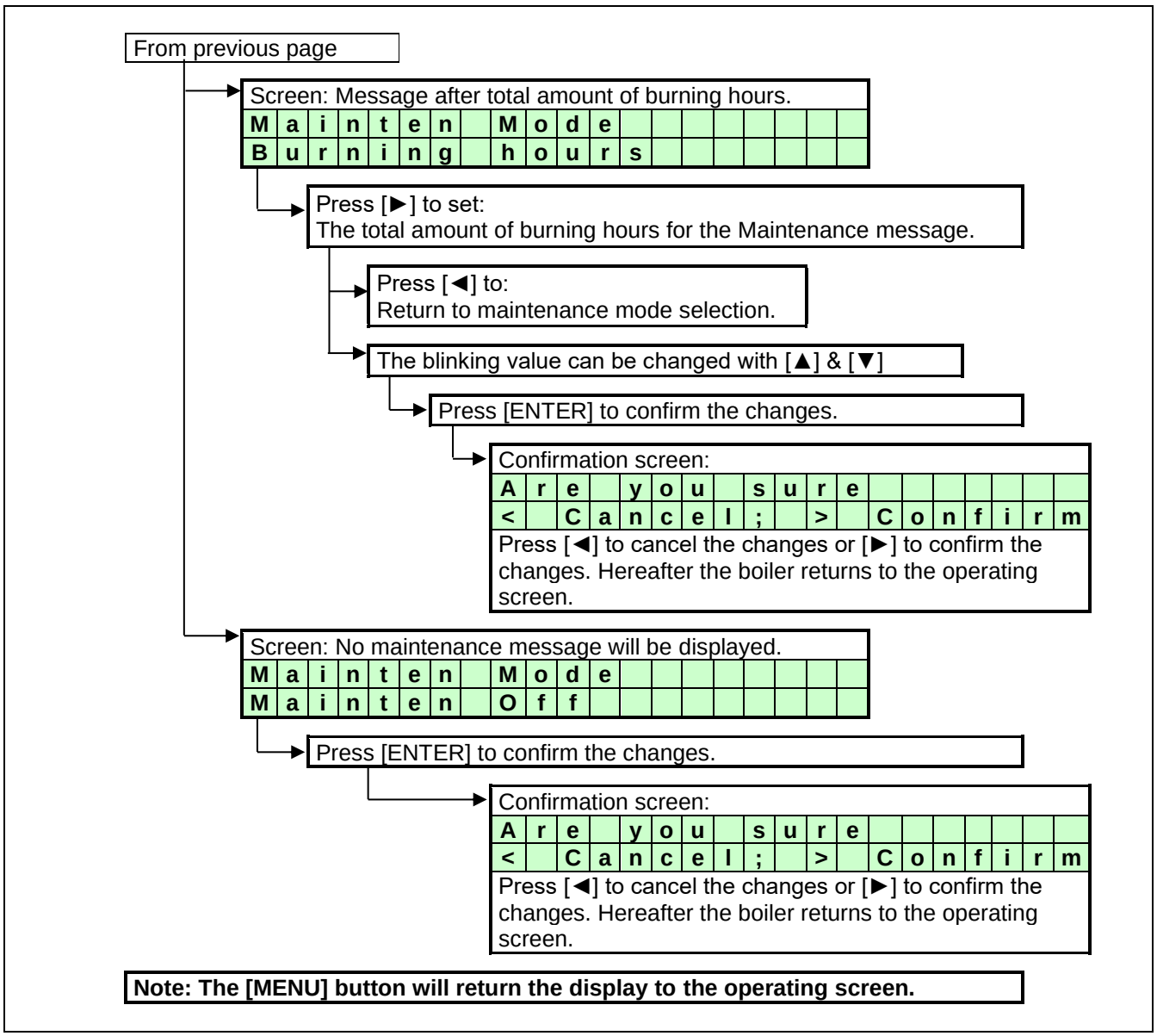

BE AWARE: This function is standard turned off. We offer this programmable function so the installer can use it as a reminder. Because it concerns a free programmable function the use of it cannot be used as an argument in warranty cases.
Our units must be maintained every twelve months whatever the settings/working of this function.

It is and remains the responsibly of the end user to have the unit maintained every twelve months.

10.15. Setting the user lock

The following graphs describe how to activate the user lock of the display. The standard factory setting for this function is “OFF”.

The "**USER LOCK**" menu.
In this menu the boiler can be locked for (end-)users.
0 = UNLOCKED
1 = LOCKED

When the boiler is unlocked, the user can enter the MENU by pressing the menu button and all screens will show up.

When the boiler is locked, the user has to push the: [MENU] button together with the [▼] button for 5 s. to access all menu screens.

This function is to prevent accidental changes.

NOTICE: The PARAMETER screen is always accessible.

Operating screen:

H	**E**	**A**	**T**	**I**	**N**	**G**	**:**	**b**	**o**	**i**	**l**	**e**	**r**		**o**	**f**	**f**		
>	**>**	**>**	**:**	**1**	**2**	**3**	**.**	**4**	**°**	**C**	**(**	**1**	**2**	**3**	**.**	**4**	**°**	**C**	**)**

Press [MENU]

Select "User lock" using [◄] & [►] and press [ENTER]

User lock screen:

S	**e**	**t**		**U**	**s**	**e**	**r**	**l**	**o**	**c**	**k**	**=**	**0**						
			0																

The "0" is now blinking/selected and can be changed.
Use [▲] & [▼] to change the value.
0 = User lock function OFF
1 = User lock function ON

Press [ENTER] for the confirmation screen after the selection has been made.

Confirmation screen:

A	**r**	**e**		**y**	**o**	**u**		**s**	**u**	**r**	**e**								
<		**C**	**a**	**n**	**c**	**e**	**l**	**;**		**>**		**C**	**o**	**n**	**f**	**i**	**r**	**m**	

Press [◄] to cancel the changes (the unit will reset and the display returns to the operating screen).

Press [►] to confirm the changes. The changed value will be blinking for a few seconds. After this, the display returns to the operating screen.

NOTICE:

Using the [MENU] button during the User lock display, will reset the boiler and the boiler will return to the operating screen. Changes will be neglected in this case.

10.16. Setting the parameters with the display menu

The functions of the controller are embedded in de electronics by means of parameters. The values and settings hereof can be programmed by a skilled and trained service engineer with the help of a computer (laptop), the correct software and an interface cable. A selection of these parameters can be programmed at the control panel of the unit itself, without the use of a computer.

The following table gives a list of all parameters that can be programmed at the control panel without the use of a laptop/computer. NOTICE: Only the password for level 1 is issued in this manual. “More advanced” parameters need to be programmed by a skilled and trained service engineer with access to level 2.

When ‘Modify = no’, the parameter can only be programmed at level 2 — **PASSWORD: 1342**

MENU			PARA-METER	DESCRIPTION	UNITS	TEXT DISPLAY	LEVEL 1 Modify
HEATING	A	1	P5BE	Step modulation (1=on 0=off)	-	Step modul	no
		2	P5AO	Blocking offset flow temperature control	°C	HE s Offl3	yes
		3	P5AP	Proportional range temperature control	°C	HE s Prb13	no
		4	P5AL	Hysteresis CH Flow temperature control	°C	HE s cDif13	yes
		5	P2IC	Integration time temperature control	s	HE s Int13	no
		6	P2MI	Blocking offset System CH temperature control	°C	HE cOff 3	yes
		7	P2MJ	Proportional range System CH temperature control	°C	HE cPrb 3	no
		8	P2MK	Integration time CH temperature control	s	HE cInt 3	no
		9	P5AB	Timer Contact (1=on)	-	Timer Con t	yes
DHW	B	1	P4AB	DHW Pump Config 0=Pump 1=TWV	-	DHimp/twv	yes
		2	P5CB	Flow temperature DHW tank low	°C	DHiflow LO	yes
		3	P5CK	Flow temperature DHW tank hi	°C	DHiflow HI	yes
		4	P5CL	Low Flow temperature time DHW	min	DHi LOtime	yes
		5	P5CD	Legionella temperature	°C	Legio temp	no
		6	P5CI	Legionella hyst DHW tank temperature	°C	Legio hyst	no
		7	P5CJ	Legionella hold time (0=off)	min	Legio hold	no
		8	P2KI	CH interrupt by Legionella (0=yes)(1=no)	-	Legio int r	no
		9	P2LC	Regulation temperature offset DHWd	°C	DHdscOff2	yes
		A	P2MN	Proportional range DHWd modulation	°C	DHdscPrb23	no
		B	P2LD	Regulation temperature hysteresis DHWd	°C	DHdscDif2	yes
		C	P2MO	integration time DHWd modulation	s	DHdscInt23	no
		D	P2ML	Sys temp blocking offset DHW tank	°C	DHdscOff3	yes
		E	P2MM	Sys temp blocking hysteresis DHW tank	°C	DHdscDif3	yes
		F	P5CA	Hysteresis DHW tank temperature	°C	DHiscDif4	yes
		G	P2KH	Gradient heat demand detect DHW tank temp.	°C	DHidetgrad	yes
CASCADE	C	1	P2MA	Max number extra boilers	-	MaxCascUnt	no
		2	P5DA	Bus address boiler	-	Bus adress	no
		3	P5DC	Dhw on entire cascade(0) only master(1)	-	DHicas/mas	no
		4	P5DE	Extra Boiler output enable(1)	-	Extra unit	yes
		5	P5DF	Cascade detection (0=standalone 1=Leader)	-	Cas Si/Ma	no
		6	P5BL	Power off total cascade (1)	-	Pwr OffToCa	no
		7	P5DB	Number of boilers with common flue 0=None	-	Com FluNum	no
GENERAL	D	1	P5BB	Analogue input Config (0=off 1=temp 2=power)	-	An Inp Con	yes
		2	P5AI	Minimum Temperature 0-10V input	°C	0-10MinTmp	yes
		3	P5BI	Altitude (in amounts of 100 ft.)	100 ft	Alt *1002ft	yes
		4	P2LK	Max cooling time	min	MaxCoolTim	yes
		5	P5BJ	Temperature display 1=on	-	TempOnDisp	yes
		6	P4AA	DHW 0=off 1=Indirect 2=Direct	-	DHW 1=i2=d	no
		7	P4AD	pressure 0=off 1=sensor and 2=switch	-	config	no
		8	P4BD	Gas type values 0-2	-	gas type	no
		9	P4BE	Soft start type values 0-2	-	config	no
		A	P5BN	Pump modes 0-3	-	config	no

For extensive explanation see Ch. 11: ‘Controlling options and settings’, page 74 ff.

IMPORTANT: Do not change the parameters P2LC, P2LD, P2ML, P2MM and P5BI; they are present in the controller for different purposes than CH control. Changing these parameters may affect boiler operation negatively**.**

Parameter screens + concise explanation see next pages →

Operating screen:

H	E	A	T	I	N	G	:	b	o	i	l	e	r		o	f	f		
>	>	>	:	1	2	3	.	4	°	C	(	1	2	3	.	4	°	C	)

Press [MENU]

Select "Parameter" using [◄] & [►] and press [ENTER]

Parameter menu:

I	n	s	t	a	l	l	e	r		c	o	d	e						
								0	0	0	0								

Enter the 4-digit code with the [◄] & [►] and the [▲] & [▼] buttons and select [ENTER]
The code will blink a few seconds and when entered correctly, the following parameters will be displayed.

NOTICE: These codes are user based and give access to a selected number of parameters, which can be changed (Installer level 1/2).

Menu A: Heating

	A	1				S	t	e	p		m	o	d	u	l				
											1								

Function to activate the step modulation:
0 = Off
1 = On

Menu A: Heating

	A	2				H	E		s		o	f	f	1	3				
											4		°	C					

CH supply temperature setting. This parameter is the offset of the programmed CH temperature.

Menu A: Heating

	A	3				H	E		s		P	r	b	1	3				
										2	5		°	C					

Select the CH supply temperature control. This parameter is the proportional range of the selected CH supply temperature.

Menu A: Heating

	A	4				H	E		s	c	D	i	f	1	3				
										1	0		°	C					

Select the CH supply temperature control. This parameter is the hysteresis of the selected CH supply temperature.

Menu A: Heating

	A	5				H	E		s		I	n	t	1	3				
										6	0		S	e	c				

Select the CH supply temperature control. This parameter is the integration time of the selected CH supply temperature.

Menu A: Heating

	A	6				H	E			c	O	f	f		3				
											4		°	C					

Select the cascaded boilers supply temperature control.
This parameter is the offset of the selected CH supply temperature of EACH boiler of the total cascade.

The screen texts on these pages are standard part of the software and apply to CH systems (boilers) and/or DHW devices (water heaters).

Menu A: Heating																			
	A	7				H	E			c	P	r	b		3				
										2	5		°	C					

Select the cascaded boilers supply temperature control.
This parameter is the proportional range of the selected CH supply temperature of EACH boiler of the total cascade and of the external (cascade) sensor.

Menu A: Heating																			
	A	8				H	E			c	I	n	t		3				
										8	0		S	e	c				

Select the cascaded boilers supply temperature control.
This parameter is the integration time of the selected CH supply temperature of EACH boiler of the total cascade and of the external (cascade) sensor.

Menu A: Heating																			
	A	9				T	i	m	e	r	C	o	n	t					
											0								

Function to activate "external time controller":
0 = Off
1 = On
Connect to 11-12. Contact closed = daytime setting,
Contact open = night-time setting.

Menu B: Hot water																			
	B	1				D	H	i	p	m	p	/	t	w	v				
											1								

Hot water function of the boiler by:
0 = pump
1 = 3-way valve

Menu B: Hot water																			
	B	2				D	H	i	f	l	o	w		L	O				
										2	5		°	C					

Hot water function of the boiler. This parameter is the CH supply temperature LOW level with an indirect hot water demand.

Menu B: Hot water																			
	B	3				D	H	i	f	l	o	w		H	I				
										8	5		°	C					

Hot water function of the boiler. This parameter is the CH supply temperature HIGH level with an indirect hot water demand.

Menu B: Hot water																			
	B	4				D	H	i		L	O	t	i	m	e				
											1		M	i	n				

Hot water function of the boiler. This parameter is the selectable time period after which the boiler switches from LOW to HIGH set point with an indirect hot water demand.

The screen texts on these pages are standard part of the software and apply to CH systems (boilers) and/or DHW devices (water heaters).

Menu B: Hot water																		
	B	5				L	e	g	i	o		t	e	m	p			
										8	5		°	C				

Pasteurisation function of the boiler. This parameter is the selected hot water temperature during the pasteurisation function of the boiler.

Menu B: Hot water																		
	B	6				L	e	g	i	o		h	y	s	t			
											2		°	C				

Pasteurisation function of the boiler. This parameter is the selected hysteresis during the pasteurisation function of the boiler.

Menu B: Hot water																		
	B	7				L	e	g	i	o		h	o	l	d			
											2		M	i	n			

Pasteurisation function of the boiler. This parameter is the selected time period for the pasteurisation function of the boiler.

Menu B: Hot water																		
	B	8				L	e	g	i	o		i	n	t	r			
											0							

Pasteurisation function of the boiler. This parameter controls if the CH demand can be interrupted by the pasteurisation function of the boiler.
0 = Yes
1 = No

Menu B: Hot water																		
	B	9				D	H	d	s	c	O	f	f	2				
											4		°	C				

Function for the direct hot water boiler.
This parameter is de off set of the selected HW temperature of the boiler.

Menu B: Hot water																		
	B	A				D	H	d	s	c	P	r	b	2	3			
										2	0		°	C				

Function for the direct hot water boiler.
This parameter is the proportional range of the selected HW temperature of the boiler.

Menu B: Hot water																		
	B	B				D	H	d	s	c	D	i	f	2				
										1	0		°	C				

Function for the direct hot water boiler.
This parameter is the hysteresis of the selected HW temperature of the boiler.

The screen texts on these pages are standard part of the software and apply to CH systems (boilers) and/or DHW devices (water heaters).

Menu B: Hot water

	B	C				D	H	d	s	c	I	n	t	2	3			
									2	0	0		S	e	c			

Function for the direct hot water boiler.
This parameter is the integration time of the selected HW temperature of the boiler.

Menu B: Hot water

	B	D				D	H	d	s	c	O	f	f	3				
											4		°	C				

Function for the cascaded direct hot water boilers.
This parameter is the offset of the selected HW temperature of the cascaded boilers.

Menu B: Hot water

	B	E				D	H	d	s	c	D	i	f	3				
											8		°	C				

Function for the cascaded direct hot water boilers.
This parameter is the hysteresis of the selected HW temperature of the cascaded boilers.

Menu B: Hot water

	B	F				D	H	i	s	c	D	i	f	4				
											5		°	C				

Function for the indirect hot water supply of the boiler (tank).
This parameter is the hysteresis of the selected HW temperature of the calorifier/tank.

Menu B: Hot water

	B	G				D	H	i	d	e	t	g	r	a	d			
											3		°	C				

Function for the indirect hot water supply of the boiler (tank).
This parameter detects an (an accelerated) hot water demand, when a larger (water) amount is being used.

Menu C: Cascade

	C	1				M	a	x	C	a	s	c	U	n	t			
										1	1							

Function for the cascading of the boiler(s).
This parameter sets the total number of cascaded boilers.
(Max. 12 boilers).

Menu C: Cascade

	C	2				B	u	s		a	d	d	r	e	s	s		
											0							

Function for the cascading of the boiler(s).
This parameter determines the address of the boiler for the total cascading control.
Master = 0, Slave 1 = 1 etc.

Menu C: Cascade

	C	3				D	H	i	c	a	s	/	m	a	s			
											0							

Function for the cascading of the boiler(s).
This parameter determines if only the Master boiler or all boilers of the cascade are used for indirect hot water.
0 = All
1 = Master

The screen texts on these pages are standard part of the software and apply to CH systems (boilers) and/or DHW devices (water heaters).

Menu C: Cascade																		
	C	4				E	x	t	r	a		u	n	i	t			
											0							

Function for the cascading of the boiler(s).
This parameter is activated when an external (extra) boiler is connected to the Master boiler. Connect to the Master connections 19-20.

Menu C: Cascade																		
	C	5				C	a	s		S	i	/	M	a				
											0							

Function for the cascading of the boiler(s).
This parameter sets the function of the boiler at a cascade alignment
0 = Single / Slave unit
1 = Master unit

Menu C: Cascade																		
	C	6				P	w	r	O	f	f	T	o	C	a			
											0							

Function for the cascading of the boiler(s).
This parameter determines the function of the Slave boilers when the Master boiler is switched off.
0 = Slave boiler(s) continue operation
1 = Slave boiler(s) switch off

Menu C: Cascade																		
	C	7				C	o	m	F	l	u	N	u	m				
											0							

Function for the cascading of the boiler(s).
This parameter determines the number of cascaded boilers, that are implemented with a common flue system.

Menu D: General																		
	D	1				0	-	1	0	V	c	o	n	t	r			
											0							

Function for the external control of the boiler by using a 0-10 Volt signal (Connections 13-14).
0 = No external control
1 = Control based on temperature setting
2 = Control based on power setting

Menu D: General																		
	D	2				0	-	1	0	M	i	n	T	m	p			
										2	0		°	C				

Function for the external control of the boiler by using a 0-10 Volt signal (Connections 13-14).
Control based on temperature (setting 1).
The minimum (desired) CH water temperature when supplying a 1.4 Volt signal.

Menu D: General																		
	D	3				A	l	t		*		1	0	0	f			
											0							

Function for setting the location height (above sea level) of the boiler.
NOTICE: dimensions in English feet. One unit = 100 ft.
Use this function only in consultation with the supplier / manufacturer.

The screen texts on these pages are standard part of the software and apply to CH systems (boilers) and/or DHW devices (water heaters).

Menu D: General

	D	4				M	a	x	C	o	o	l	T	i	m			
											2		M	i	n			

Function for setting the maximum overrun time of the fan (maximum 10 minutes).
0 = Switch off

Menu D: General

	D	5				T	e	m	p	O	n	D	i	s	p			
											1							

Function to show the (measured) temperature of the boiler at the display.

Menu D: General

	D	6				D	H	W		1	=	i	2	=	d			
											1							

Function to set up the CH and HW boiler options.
0 = CH only (direct)
1 = CH/HW function (indirect)
2 = HW only (direct)

Menu D: General

	D	7				c	o	n	f	i	g							

Function for the setting of the water pressure.
Up to 4 bar a sensor is used, up to 6 bar a switch.
0 = off
1 = sensor
2 = switch

Menu D: General

	D	8				g	a	s	t	y	p	e						

Function to select the gas type*

0 = G20, G25
1 = G31
2 = B/P

*According to EN437

Menu D: General

	D	9				c	o	n	f	i	g							

Function for setting the 'soft start' option
0 = normal start-up
1 = reduced fan ramp-up speed (I)
2 = reduced fan ramp-up speed (II)

Menu D: General

	D	A				c	o	n	f	i	g							

Function: Pump mode
0 = normal
1 = relay **1**, connector 17 and 18 (lock-out)
2 = relay **2**, connector 19 and 20 (burner burning)
3 = relay **3**, connector 21 and 22 (heat demand)
4 = Do not use (reserved for future applications).

The screen texts on these pages are standard part of the software and apply to CH systems (boilers) and/or DHW devices (water heaters).

10.17. *Fault codes display*

The following graphs describe the lock out codes of the boiler. A lock out code can only be removed by a manual resetting of the boiler. NOTICE: Before resetting the boiler always check the boiler, central heating system and all components corresponding to the related lock out description. Never just reset the boiler, before analysing the possible cause of failure.

10.17.1. LOCK-OUT CODES

Having a lockout means that the boiler needs a manual reset to start operating again.
When the boiler is in lockout the backlight of the display is blinking on and off.

Explanation > 9 9 9 , 5 : h r s = time elapsed after fault & message.

Explanation > P u m p 1 o n = status of the pump during fault.

Display message	C	l	i	x	o	n		F	a	u	l	t								
F15	p	u	m	p		o	n					9	9	9	,	5		h	r	s

Reason Heat exchanger fuse or burner door clixon exceeded maximum allowed value.

Display message	F	a	i	l	e	d		b	u	r	n	e	r		s	t	a	r	t	
F8	p	u	m	p		o	n					9	9	9	,	5		h	r	s

Reason Boiler is not starting after the programmed starting attempts.

Display message	F	a	l	s	e		f	l	a	m	e		s	i	g	n	a	l		
F10	p	u	m	p		o	n					9	9	9	,	5		h	r	s

Reason Flame signal is detected while it cannot be expected.

Display message	F	a	n		s	p	e	e	d		i	n	c	o	r	r	e	c	t	
F11	p	u	m	p		o	n					9	9	9	,	5		h	r	s

Reason The controller does not detect a correct fan speed.

Display message	F	l	a	m	e		l	o	s	t										
F9	p	u	m	p		o	n					9	9	9	,	5		h	r	s

Reason Flame detected during normal operation, but was lost while running.

Display message	F	l	o	w		h	i	g	h		T	e	m	p						
F1	p	u	m	p		o	n					9	9	9	,	5		h	r	s

Reason Flow temperature exceeds the limit which has been set in the parameters.

Display message	F	l	o	w	R	e	t	u	r	n		d	t		f	a	u	l	t	
F16	p	u	m	p		o	n					9	9	9	,	5		h	r	s

Reason Temperature difference between flow and return exceeds limitation value, or 'dT block or delta direct block' has occurred three times.

Display message	F	l	o	w		s	e	n	s	o	r		e	r	r	o	r			
F0	p	u	m	p		o	n					9	9	9	,	5		h	r	s

Reason Flow sensor not detected by the boiler caused by faulty connection/sensor.

Display message	F	l	u	e		s	e	n	s	o	r		e	r	r	o	r			
F6	p	u	m	p		o	n					9	9	9	,	5		h	r	s

Reason Flue gas sensor not detected by the boiler caused by faulty connection/sensor.

Display message	F	l	u	e		t	e	m	p		t	o	o		h	i	g	h		
F7	p	u	m	p		o	n					9	9	9	,	5		h	r	s

Reason Flue gas temperature exceeds the limit more than 3 times within a certain time frame.

Display message	P	a	r	a	m	/	H	a	r	d	w		f	a	u	l	t			
F13	p	u	m	p		o	n					9	9	9	,	5		h	r	s

Reason Fault during programming of the boiler software parameters.

Display message	p	r	o	g	r	a	m	m	i	n	g		e	n	d					
F12	p	u	m	p		o	n					9	9	9	,	5		h	r	s

Reason Software parameters have been programmed.

Display message	R	e	t	u	r	n		h	i	g	h		T	e	m	p				
F1	p	u	m	p		o	n					9	9	9	,	5		h	r	s

Reason The maximum return temperature as set in the parameters is exceeded.

Display message	R	e	t	u	r	n		s	e	n	s	o	r		e	r	r	o	r	
F3	p	u	m	p		o	n					9	9	9	,	5		h	r	s

Reason Return sensor not detected by the boiler caused by faulty connection/sensor.

Display message	W	a	t	e	r		h	i	g	h		l	i	m	i	t				
F17	p	u	m	p		o	n					9	9	9	,	5		h	r	s

Reason Maximum thermostat (clixon) measured a too high flow temperature.

10.17.2. Blocking codes

The following graphs describe the blocking codes of the boiler. A blocking code is only a temporary blocking of the boiler, because of an extraordinary situation. The boiler will continue to operate after stabilisation of this situation.

The display is not blinking, but is lightened up during the blocking period.
The boiler is blocking an action because of an extraordinary situation. This action will be continued after stabilisation of this situation.

Display message	A	n	t	i	c	y	c	l	e		t	i	m	e						
												9	9	9	,	5		h	r	s

Reason The controller received a new heat demand too quick after the last ended demand.

Display message	C	a	s	c	a	d	e		B	l	o	c	k							
												9	9	9	,	5		h	r	s

Reason One of the cascaded boilers causes an error, because of a lock out.

Display message	D	e	a	i	r	a	t	i	o	n										
												9	9	9	,	5		h	r	s

Reason The boiler starts its deairation function and after will return to normal operation. This function can be activated by parameter P4AJ.

Display message	d	T		b	l	o	c	k												
												9	9	9	,	5		h	r	s

Reason Temperature difference between flow and return exceeds the blocking value but not the lock out value.

Display message	F	l	o	w		t	e	m	p		h	i	g	h						
												9	9	9	,	5		h	r	s

Reason Flow temperature has exceeded the blocking temperature, but it has not exceeded the lock-out value

Display message	F	l	u	e		t	e	m	p		h	i	g	h					
												9	9	9	,	5		h	r	s

Reason Flue gas temperature has exceeded the limit.

Display message	G	e	n		B	l	o	c	k										
												9	9	9	,	5		h	r	s

Reason The general blocking circuit is activated during operation = contact 7-8

Display message	L	i	n	e		f	a	u	l	t									
												9	9	9	,	5		h	r	s

Reason Wrong electrical power supply is connected (not 50 or 60 Hz, 220-240 Volt).

Display message	O	u	t	d	o	o	r		s	e	n	s	o	r		f	a	i	l
												9	9	9	,	5		h	r	s

Reason Outdoor temperature has exceeded the blocking temperature.

Display message	R	e	t	u	r	n		t	e	m	p		h	i	g	h			
												9	9	9	,	5		h	r	s

Reason Return temperature has exceeded the blocking temperature, but the return temperature has not exceeded the lock-out value.

Display message	T	2	-	T	1		h	i	g	h									
												9	9	9	,	5		h	r	s

Reason Temperature difference T2-T1 has exceeded the blocking value.

Display message	W	a	t	e	r	p	r	e	s	s	u	r	e		f	a	u	l	t
												9	9	9	,	5		h	r	s

Reason Water pressure is too low or too high.

10.17.3. MAINTENANCE ATTENTION MESSAGES

The following graphs describe the messages at the boiler display. Depending on the selected and activated options for the boiler, it is possible that some messages will show up at the display of the boiler. For example, a maintenance message after a certain programmed date has been reached. The boiler will operate independently of these messages.

The display shows alternating the base screen and this message, while the backlight is blinking.
The boiler is operating, but will count the exceeding hours.
A parameter must be changed, after service, to remove this message.

Display message	N	e	e	d	s		M	a	i	n	t	e	n	a	n			0	.	0
	I	g	n	i	t	i	o	n		c	y	c	l	e	s		h	r	s	

Reason: Maintenance option of total number of ignition cycles has been reached.

Display message	N	e	e	d	s		M	a	i	n	t	e	n	a	n			0	.	0
	D	a	t	e													h	r	s	

Reason: Maintenance option of the date has been reached.

Display message	N	e	e	d	s		M	a	i	n	t	e	n	a	n			0	.	0
	B	u	r	n	i	n	g		h	o	u	r	s				h	r	s	

Reason: Maintenance option of total number of burning hours has been reached.

Display message	N	e	e	d	s		M	a	i	n	t	e	n	a	n			0	.	0
	A	l	l														h	r	s	

Reason: One of the abovementioned maintenance options has been reached.

11. CONTROLLING OPTIONS AND SETTINGS

11.1. General

The following chapters describe some general functions of the boiler and their possible use.

11.1.1. EXTRA BOILER CONTROL

When all units (cascaded) are firing at their maximum it is possible to start an extra “external” heating source. This unit can be connected to the “Burner Burning” contacts (connection 19-20).

P5DE Extra boiler output enable (1) (display C4)
When this parameter is set at 1 the contact “Burner Burning” will close, but only when all units are firing at a certain (programmable) input percentage. The standard factory setting for this function is “OFF”.

11.1.2. MAX COOLING TIME

The fan will cool down the heat exchanger according to the temperature settings (parameters) of the software. With this cooling parameter, the maximum run time of the fan can be programmed.

P2LK Max cooling time (display D4)
This function is not used for central heating boilers.

11.1.3. TEMPERATURE DISPLAY ON/OFF

Selection for showing the measured temperatures in the operation display of the boiler.

P5BJ Temperature display 1=on (display D5)
The measured temperature in the operation display.
0 = not visible
1 = visible

11.1.4. WATER PRESSURE

P4 AD pressure 0=off, 1=sensor, 2=switch (display D7).
When the water pressure exceeds 4 bar a pressure switch must be used instead of the sensor (suitable till 4 bar). With the switch, pressure can go up to 6 bar. In this case, remove the pressure sensor and replace it by the pressure switch.
Now set the parameter at the control panel by changing “D7 config” from 1 into 2.

11.1.5. GAS TYPE SELECTION

Settings for gas types: natural gas, propane or butane-propane mixture (B/P).

P4 BD Gas type (0=standard, 1=propane , 2=B/P) (display D8).
This parameter is set 0 for the common used gas types such as natural gas G20 or G25.
By setting this parameter 1 for propane, fan speed is reduced.
Set this parameter 2 for B/P.

0 = standard gas (e.g.: natural gas)
1 = propane
2 = B/P

By each setting, the relevant Soft start settings are automatically adjusted, depending on its main setting **P4BE**, see next section § 11.1.6.

Remark: For the S-CB PX 120 it is not necessary to use P4BD because the air restrictor kit for propane/butane must be used.

In case of gas conversion, paste the corresponding sticker at the appropriate position in the boiler and mark the square for the used gas type.
Because it is not necessary to set parameter P4BD leave the square for parameter P4BD blank.

G31 P	PROPANE PROPAN PROPANO PROPAAN		P4BD = 1	
G30/G31 B/P	BUTANE/PROPANE BUTAN/PROPAN BUTANO/PROPANO BUTAAN/PROPAAN		P4BD = 2	

(In the example on the right, 'propane is marked' and P4BD = blank).

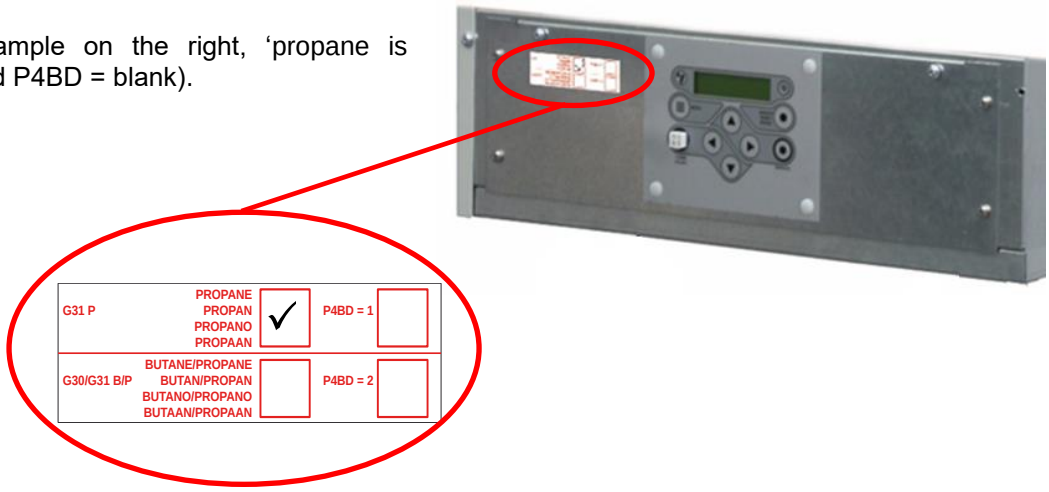

11.1.6. SOFT START OPTION

Start parameters can be modified to achieve better start behaviour, in case of noise or other difficulties. This is done by reducing the fan ramp-up speed. Two reduced settings are available (I and II).

P4 BE **Soft start (0=normal, 1=reduced fan ramp-up speed (I), 2= reduced fan speed ramp-up (II)) (display D9).**

0 = normal start-up
1 = reduced fan ramp-up speed (I)
2 = reduced fan ramp-up speed (II)

11.1.7. PUMP MODE (EC TECHNOLOGY)

When using a pump with Electronic Commutation technology and start-stop function, this parameter determines the relay for switching the pump on and off.

P5 BN **Pump mode (0=normal, 1=relay1, 2= relay2, 3= relay3 (display DA).**

Do not use the 230 Vac relay for the main power supply of the pump, but directly connect the pump to an external power supply.

A modulating pump with PWM control: the power supply is directly connected to the mains, the PWM connection is connected to CN10, contacts 9 and 18.
Pumps with an on/off control can be switched by one of the relay connections "lock-out", "burner burning" or "heat demand". Choose a connection which is not yet used.

0 = PWM 0-100% modulating pump, connection **CN10**, connectors 9 and 18
1 = Start-stop through relay **1**, connectors 17 and 18 (lock-out)
2 = Start-stop through relay **2**, connectors 19 and 20 (burner burning)
3 = Start-stop through relay **3**, connectors 21 and 22 (heat demand)
4 = Do not use (reserved for future applications).

The boiler pump must be controlled by the Strebel S-CB PX 120 boiler control. If, for any reason, an external pump control is applied *without written approval,* the complete warranty on the boiler and all supplied parts will become invalid.

Heating

The following chapters describe the different functions of the boiler and their related “controlling behaviour settings” as a central heating boiler.

11.1.8. CONTROLLING BEHAVIOUR SETTINGS

The factory settings for all heating applications are working fine and it is therefore advised not to change these settings. If changes are needed always consult the manufacturer for advice.

P5 AO Blocking offset flow temperature control (display A2).
The amount of degrees the measured temperature exceeds the active flow temperature set point before the heat demand stops. Only active when the unit is controlled by the internal flow sensor (S1) and used for single unit control.

P5 AL Hysteresis CH Flow temperature control (display A4).
The amount of degrees that the measured temperature must drop, relative to the active flow temperature set point + Offset (Parameter **P5 AO**), before the heat demand starts. This function is active when the unit is controlled by the internal flow sensor (S1) and used for single units. When controlling cascaded units with an external system sensor (S3), this sensor will be used.

P5 AP Proportional range single heating boiler (display A3).
The proportional range for controlling the flow temperature of the boiler. This function is active when the unit is controlled by the internal flow sensor (S1) and used for single units. When controlling cascaded units with an external system sensor (S3), this sensor will be used.

P2 MI Blocking offset System CH temperature control (display A6).
The amount of degrees the measured temperature exceeds the active flow temperature set point before heat demand stops. Only active when the unit is controlled by an external system sensor (S3).

The following graph shows the relation between the several parameters.

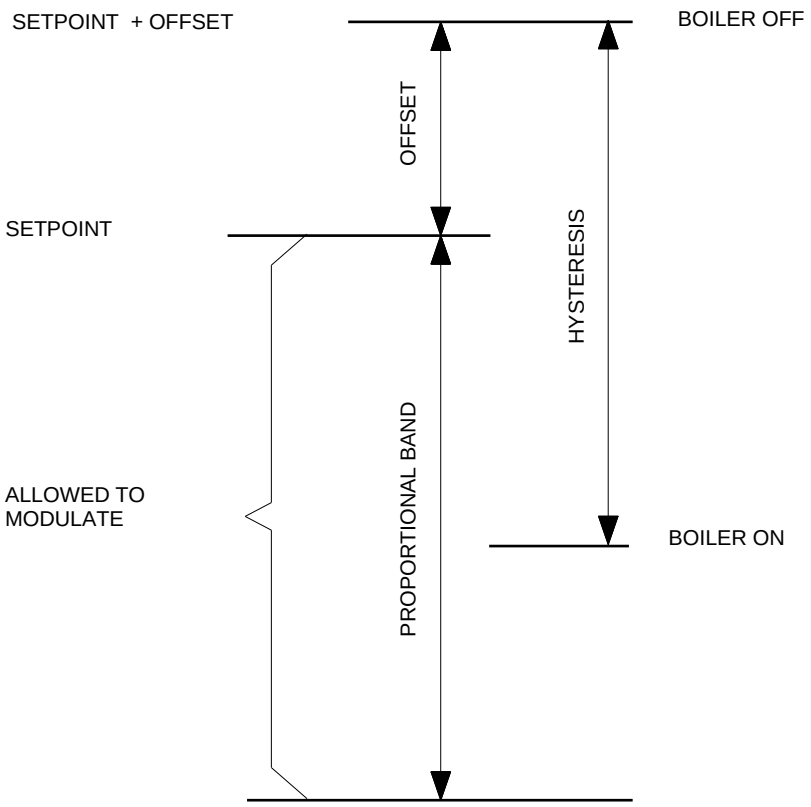

WHEN CONTROLLING ON INTERNAL FLOW SENSOR

Settings:

P5 AO	Offset	= 5°C
P5 AP	Proportional band	= 15°C
P5 AL	Hysteresis	= 10°C
	Temp. set point	= 50°C

Burner starts at 45°C
Set point + Offset - Hysteresis = 50+5-10= 45°C

Burner stops at 55°C
Set point + Offset = 50 + 5 = 55°C

WHEN CONTROLLING ON EXTERNAL FLOW SENSOR

Settings:

P2 MI	Offset	= 5°C
P5 AP	Proportional band	= 15°C
P5 AL	Hysteresis	= 10°C
	Temp. set point	= 70°C

Burner starts at 65°C
Set point + Offset - Hysteresis = 70+5-10= 65°C

Burner stops at 75°C
Set point + Offset = 70 + 5 = 75°C

Graph and values only for illustration purposes, programmed parameter values can deviate!

11.1.9. ROOM THERMOSTAT ON/OFF

A room thermostat with a fixed set point and using an ON/OFF control can be connected to the boiler (connections 11-12). Changing the flow temperature set point and activation of a timer program can be done by this room thermostat or by programming the boiler settings. See chapter 10.10.

11.1.10. ROOM THERMOSTAT OPEN THERM

An RC OpenTherm controller can be connected to the boiler for temperature reading(s) and remote programming (connections 11-12).

11.1.11. OUTDOOR TEMPERATURE RELATED FLOW CONTROL

The flow temperature can be calculated by using the measured outdoor temperature for controlling the boiler. See for detailed information § 10.11.

11.1.12. 0-10 VDC REMOTE FLOW TEMPERATURE SET POINT

The flow temperature is controlled by connecting an external 0-10 Vdc signal to the boiler (connections 13-14).

P5 BB Analogue input Config (0=off 1=temp 2=power) (display D1).
This parameter must be set at "1" so the supplied 0-10V dc signal will control the temperature set point.
Possible settings are:

0 = 0-10V control off
1 = 0-10V temperature set point control active
2 = 0-10V burner input control active

P5 AI Minimum Temperature 0-10V input (display D2).
The standard starting temperature of the heat demand, when the minimum voltage signal is sent to the boiler. The factory settings for all heating applications are working fine and it is therefore advised not to change these settings. If changes are needed always consult the manufacturer for advice.

See also the following graph for the relation between the temperature and the control signal.

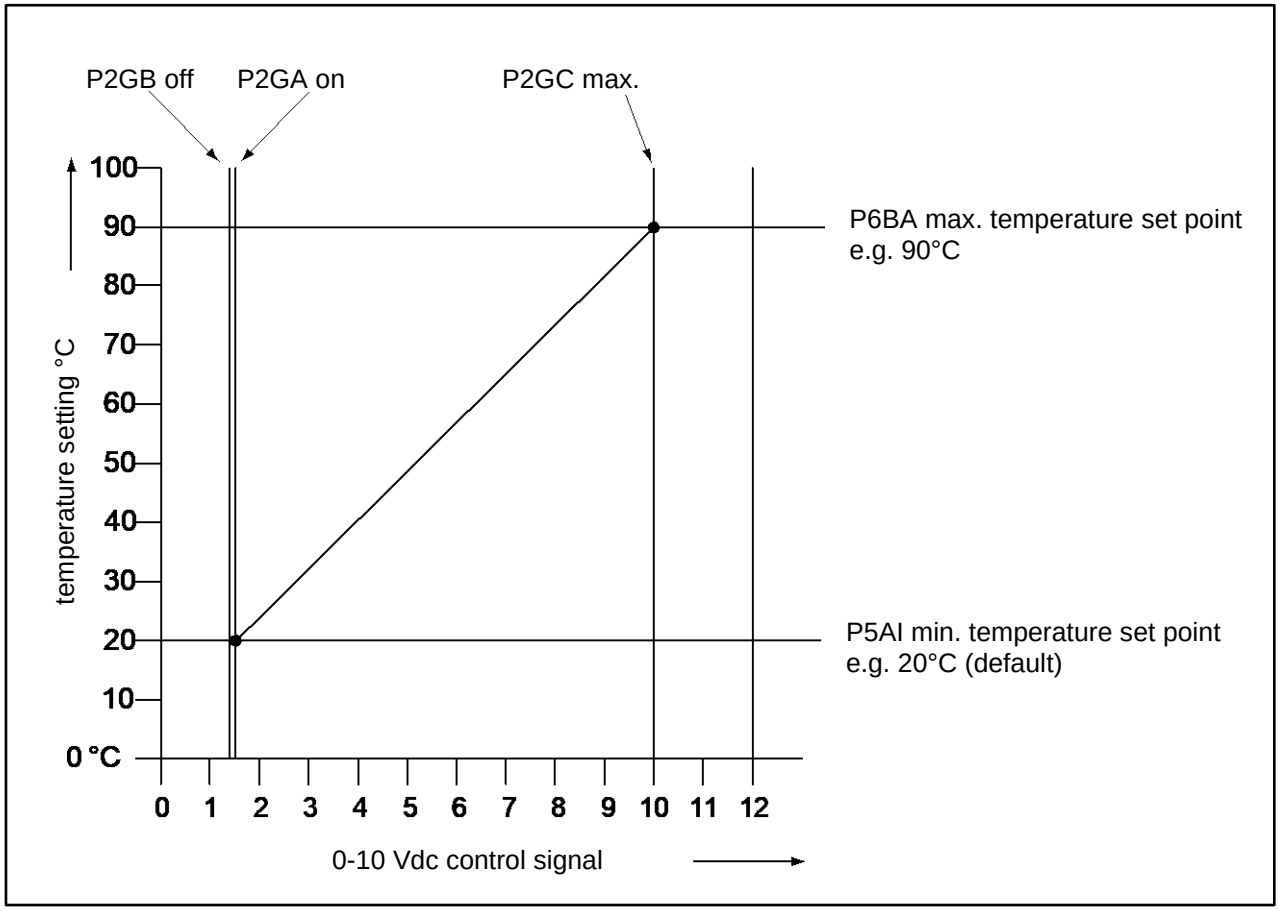

Graph and values only for illustration purposes, programmed parameter values can deviate!

11.1.13. 0-10 VDC REMOTE BURNER INPUT CONTROL

The burner input is controlled by connecting an external 0-10 Vdc signal to the boiler (connections 13-14).

P5 BB Analogue input Config (0=off 1=temp 2=power) (display D1).
This parameter must be set at "2" so the supplied 0-10V dc signal will control the burner input. The standard factory setting is “1”, temperature set point control. Possible settings are:

0 = 0-10 V control off
1 = 0-10 V temperature set point control active
2 = 0-10 V burner input control active

See also the following graph for the relation between the burner input and the control signal.

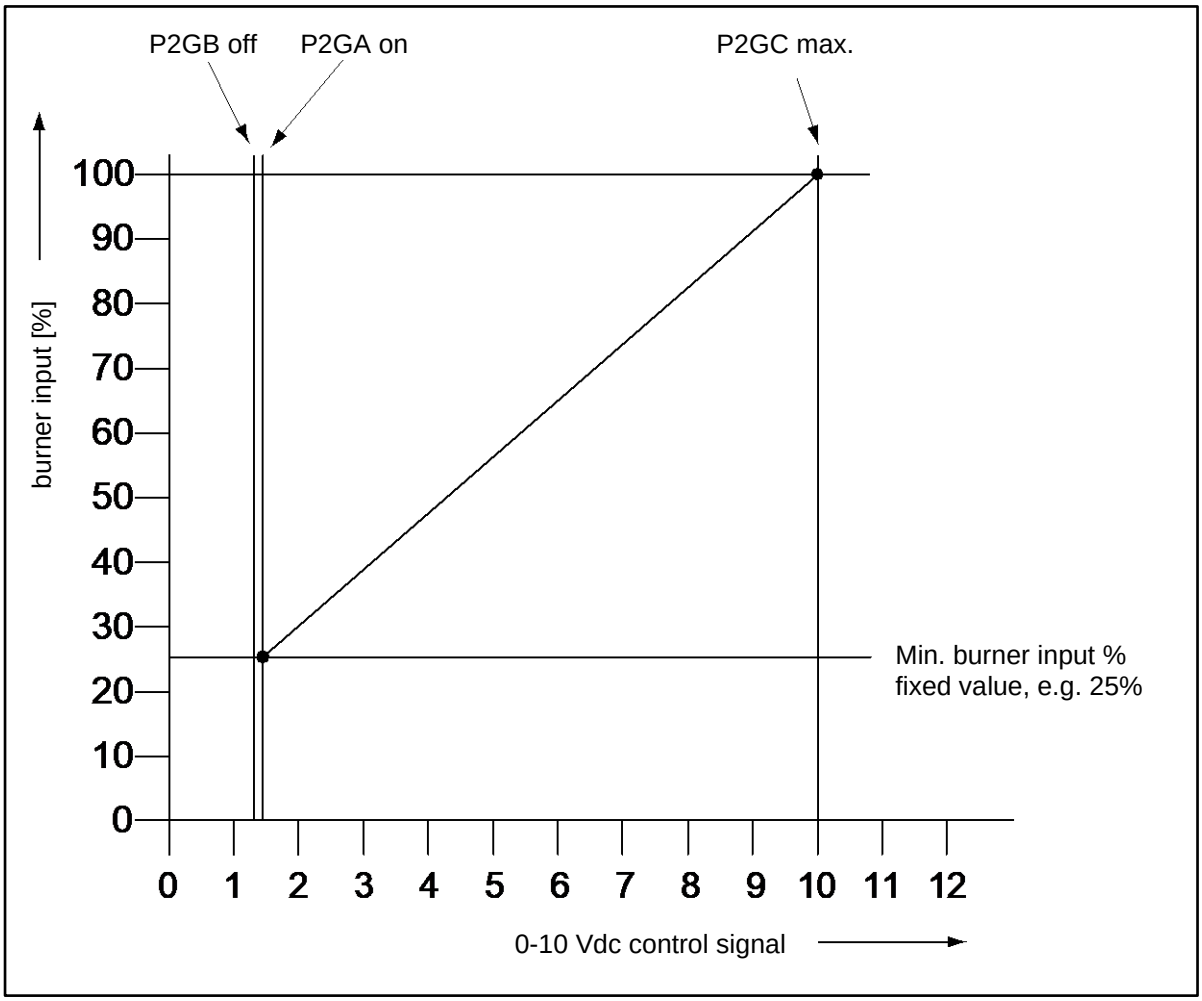

Graph and values only for illustration purposes, programmed parameter values can deviate!

11.1.14. TIMER CONTACT FUNCTION

This function can be activated when using an external night reduction timer for heating. This timer contact can be connected to the thermostat terminals (connections 11-12).

P5 AB Timer Contact (1=on) (display A9).
When this parameter is activated and:
- The thermostat terminals are bridged (timer contact closed), the normal day-time temperature is used as set point.
- The thermostat terminals are not bridged (timer contact open), the night reduced temperature is used as set point.

11.2. Indirect hot water / calorifier

The following chapters describe the different functions of the boiler and their related “controlling behaviour settings” as a central heating boiler with an indirect hot water function.

11.2.1. PUMP AND 3-WAY VALVE CONTROL

See chapter 0 for several installation examples of the boiler and the preferred functions. When the boiler is used as an indirect boiler for both central heating and hot water function, this hot water function can be activated by using a DHW pump or a 3-way valve.

P4 AB DHW Pump Config 0=Pump 1=TWV (display B1)
Use this parameter to program whether the flow to the indirect water tank (calorifier) is controlled by a pump (0 = Pump) or a 3-way valve (1 = TWV).

11.2.2. TANK THERMOSTAT

An external thermostat can be connected to the boiler (connections 5-6). When there is a hot water demand and the tank thermostat closes, the boiler will start for the hot water demand. The calorifier/tank pump will be activated or in case of a 3-way valve, this valve will turn to the position to supply heat to the tank coil(s). In case of a heat demand and hot water demand, the CH pump will switch off until the hot water demand ends.

P4 AB DHW Pump Config 0=Pump 1=TWV (display B1)
Use this parameter to program whether the flow to the indirect water tank (calorifier) is controlled by a pump (0 = Pump) or a 3-way valve (1 = TWV).

11.2.3. TANK SENSOR

A tank sensor can be connected to the boiler. The tank (hot water) set point and related controlling parameters are set in the boiler controller. A hot water demand is detected by the boiler, when the sensor (water) temperature drops below the set point. The calorifier/tank pump will be activated or in case of a 3-way valve, this valve will turn to the position to supply heat to the tank coil(s). In case of a heat and hot water demand at the same time, the heating pump will switch off until the hot water demand is stopped (water temperature is reached).

P5 CA Hysteresis DHW tank temperature (display BF)
The amount of degrees that the hot water temperature in the indirect water tank/calorifier needs to drop relative to the hot water set point, before the heat demand is transported to the boiler.

11.2.4. LOW/HIGH FLOW TEMPERATURE TO TANK COIL

This function can only be used for an “indirect” programmed boiler (parameter P4 AA = 1).
Normally for a regular calorifier a fixed flow temperature of 85°C is supplied to the calorifier heat exchanger in case of a heat demand. This hot water flow will indirectly heat up the water in the calorifier tank.

The parameters for this function can be configured for both low and high calorifier operation.

This function operates as follows:
In case of a heat demand, the boiler supplies water to the heat exchanger of the calorifier, according to the flow temperature set in parameter **P5 CB**. When the heat demand remains for the period set in parameter **P5 CL**, the flow temperature set point will change to a higher temperature, which is set in parameter **P5 CK**. This situation continues until the heat demand ends.

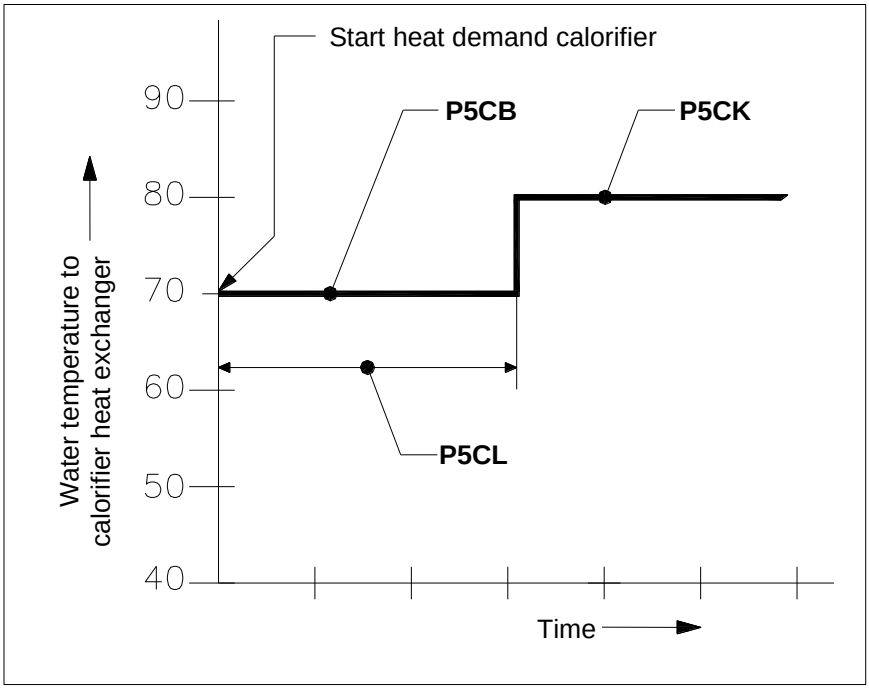

The reason for this function is that the boiler by supplying a lower flow temperature to the heat exchanger of the calorifier, can stay in its condensing mode (if the temperature is low enough) and thus operate at a higher efficiency level. When it takes too long (> **P5 CL**) to heat up the tank with this low temperature mode, the flow temperature set point will change to a higher setting to make sure that the hot water set point is reached.

P5 CB Flow temperature DHW tank low (display B2)
The low-level flow temperature to the tank coil(s) in case of a calorifier/indirect hot water demand. This “two staged” function is added to keep the boiler in the condensing mode as long as possible.

P5 CK Flow temperature DHW tank high (display B3)
The high-level flow temperature to the tank coil(s) in case of a calorifier/indirect hot water demand.

P5 CL Low flow temperature time DHW (display B4)
The programmed period for changing the set point of the water flow temperature from low to high.
The standard factory setting for this function is “OFF”.

11.2.5. HEATING AND HOT WATER SWITCHING TIME

This function can only be used for an “indirect” programmed boiler (parameter **P4 AA** = 1).
In case there is a heating demand and the unit is operating for this heating demand, also a hot water demand can be activated. A hot water demand always has priority, this means that the unit will switch to hot water operation. When the hot water demand remains for a longer period, there will be no heat supply for/to the central heating system during this period. Not supplying any heat for/to the central heating system might cause undesirable temperature fluctuations. The following parameters can be used to program the preferred settings.

P5 CL Low flow temperature time DHW (display B4)
The period during which the set point of the water flow temperature (to the heating coil(s) of the calorifier) will switch from “low” to “high”.

P5 CF Max runtime DHW during CH demand
The programmed period for the boiler to operate for DHW demand in case of a CH demand. After this period, the boiler will switch to operate for CH demand, even when there is still a DHW demand.

P5 CM Max runtime CH during DHW demand
The programmed period for the boiler to operate for CH demand in case of a DHW demand. After this period, the boiler will switch to operate for DHW demand, even when there is still a CH demand.

The standard factory setting for this function is that the hot water demand always has priority and that no switching between the heat and hot water demand happens, when both are active.

11.2.6. HEATING AND HOT WATER SWITCHING AT SUDDEN TEMPERATURE DROP

This function can be used to detect indirect water tank/calorifier heat demand in case of a sudden temperature drop within the range between the set point and the (minimum) value at which the boiler is normally switched on. For this parameter is chosen the value of the temperature drop detected within one second, at which an immediate indirect hot water demand is activated.

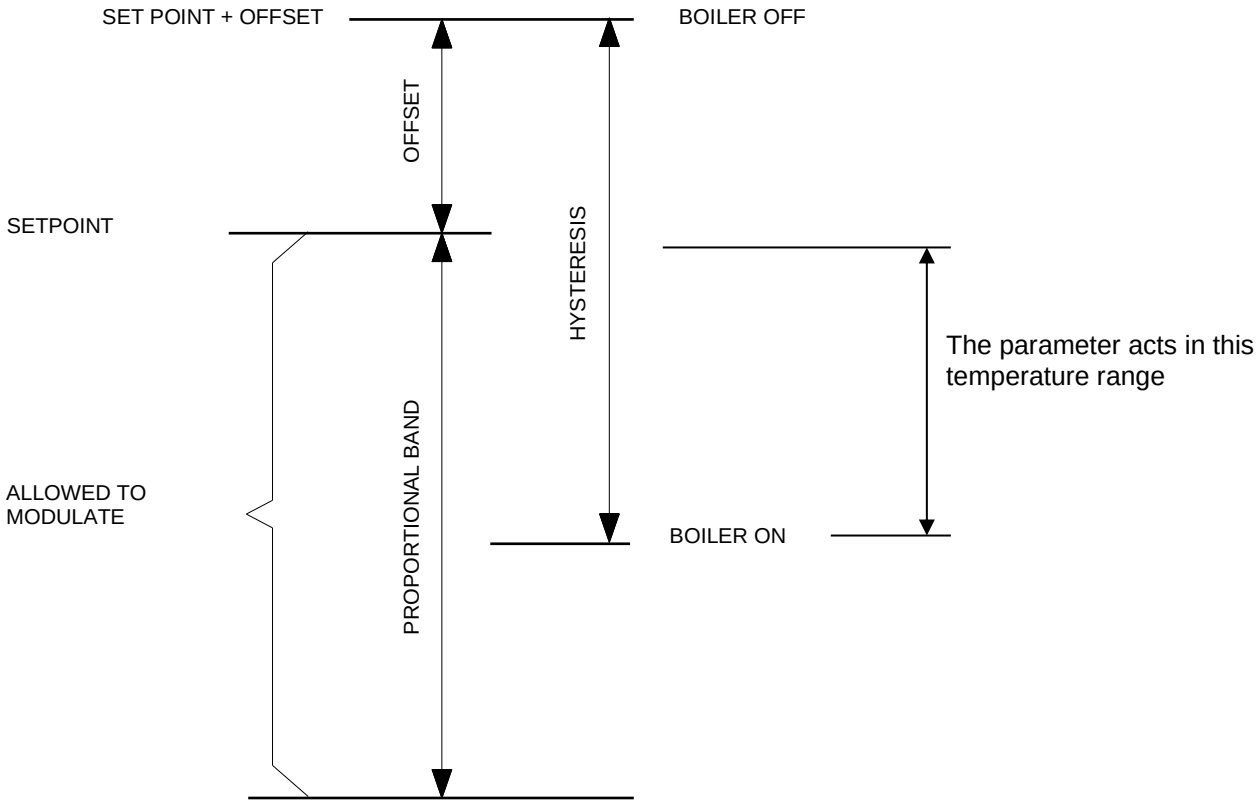

P2KH Gradient heat demand detect DHW tank temperature (display BG)
See the given explanation.
The standard factory setting for this function is “OFF”.

11.2.7. ANTI-LEGIONNAIRES' DISEASE FUNCTION (PASTEURISATION)

This function can only be used for an "indirect" programmed boiler (parameter **P4 AA** = 1), on which a DHW program is active.
To prevent Legionnaires' disease the boiler (software) provides a function for heating up the hot water storage tank (once a week) to a higher water temperature then the normal active hot water set point. Also the period, that this "higher" water temperature function must be active, can be programmed.
NOTICE: The standard factory setting for this Legionnaires' disease (pasteurisation) function is "OFF". To activate this Legionnaires' disease function, some parameters must be programmed by the manufacturer/supplier. The starting day and starting time of this Legionnaires' disease function can be programmed at the control panel of the boiler.

There are several parameters being used for this function. Three of these parameters are shown in the following graph.

With parameter **P2 KI** the heating (CH) demand can be interrupted to provide heat for the anti-Legionnaires' disease demand. When no interruption is activated the boiler will wait for the end of the heat demand before the anti-Legionnaires' disease function starts. The standard factory setting for this function is "OFF".

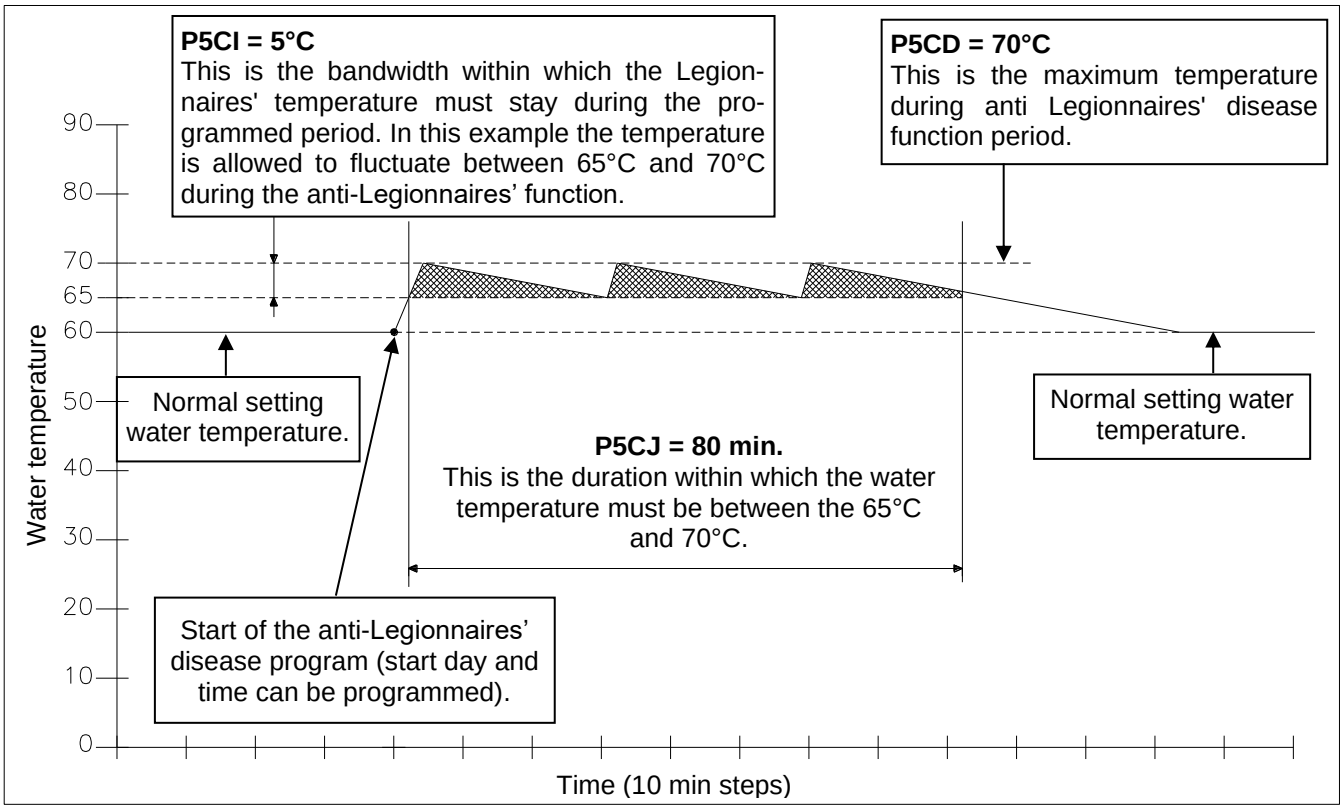

Graph and values only for illustration purposes, programmed parameter values can deviate!

The settings of these parameters **P5 CI**, **P5 CJ** and **P5 CD** must be programmed according to all applicable anti Legionnaires' disease preventing regulations.

The setting of these parameters can only be done by the manufacturer/supplier of the water heater or by a technician with access to programming level 2, at the control panel of the unit without the use of a computer.

NOTICE: The use and activation of this function won't guarantee a Legionnaires' disease free installation. The responsibility for a Legionnaires' disease free installation remains at the end-user/owner.

11.3. Cascade control

→ *The following information is also found in the specific S-CB cascade manual, supplied separately.*

Before commissioning a cascade installation, a number of parameters has to be changed.
These parameters can be programmed on the unit itself, without the use of a computer.

⚠ Changes in parameter may only be carried out by a skilled commissioning/service engineer, who has had specific training for setting up the Strebel S-CB range boilers. He will be able to check whether the installation functions correctly after the parameter change has been done.

For programming, **all parameters** of the boilers one needs to have a laptop with the appropriate software and an interface cable for connecting the laptop to the boiler control (part no.: E400278). This software is used for programming but also shows all measured temperatures and cascade behaviour during operation and service/fault history.

11.3.1. PARAMETER SETTINGS FOR CASCADED BOILERS

Before programming the cascaded boilers, make sure that all boilers are connected (wire) with each other. Use connection 15 and 16 of each boiler.

IMPORTANT: Do not alternate these connections, so always connect 15 to 15 and 16 to 16.

After connection, every boiler must be programmed. This can be done at the control panel. Press the [MENU] button and select the [PARAMETER] menu. See graphics below.

Operating screen:

H	E	A	T	I	N	G	:	S	T	A	N	D	-	B	Y				
>	>	>	:	1	2	3	.	4	°	C	(	1	2	3	.	4	°	C	)

↓

Press [MENU]

↓

Main menu screen:

M	a	i	n		M	e	n	u											
S	e	t	p	o	i	n	t	s											

↓

Select "Parameter" using [◄] & [►] and press [ENTER]

After this, use the password for installer's level 2.

Parameter menu:

I	n	s	t	a	l	l	e	r		c	o	d	e						
								0	0	0	0								

↓ ↓ ↓ ↓

Enter the 4-digit code with the [◄] & [►] and the [▲] & [▼] buttons and select [ENTER]
The code will blink a few seconds and when entered correctly, the following parameters will be displayed.

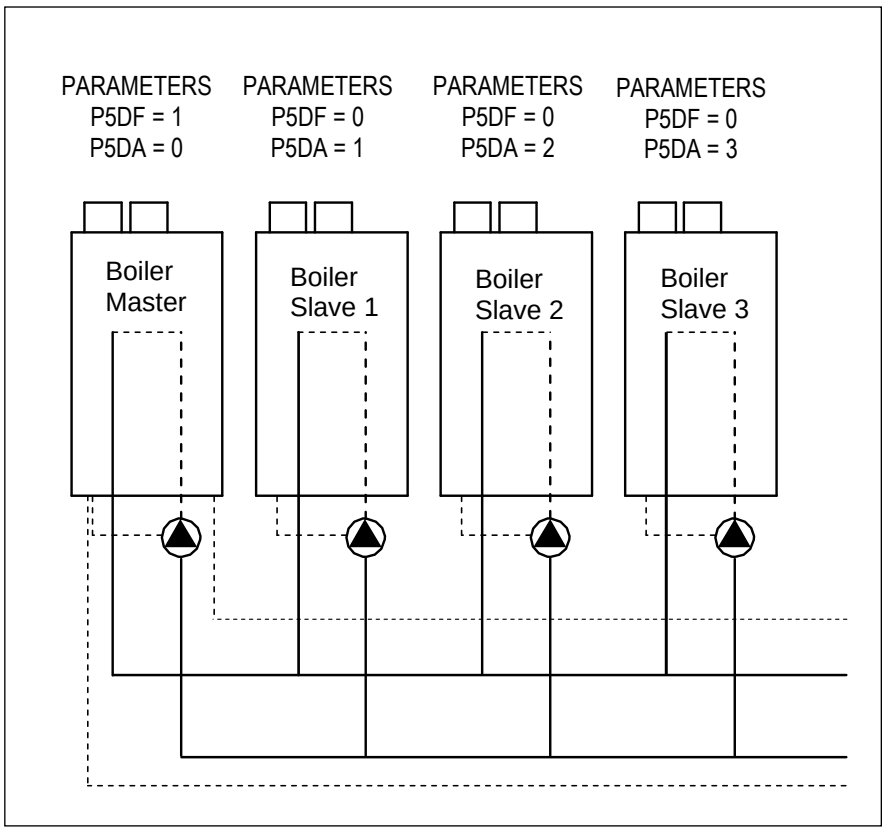

15	16
A	B

CASCADE CONNECTION

Now for every single boiler of the cascade the following two parameters must be selected and programmed according to the above drawing.

Master:
C5 P5 DF**1**
C2 P5 DA **0**

Slave 1:
C5 P5 DF**0**
C2 P5 DA **1**

Slave 2:
C5 P5 DF**0**
C2 P5 DA **2**
And so on.

Menu C: Cascade																			
	C	**5**				**C**	**a**	**s**		**S**	**i**	**/**	**M**	**a**					
											0								

Function for the cascading of the boiler(s).
This parameter sets the function of the boiler at a cascade alignment
0 = Single / Slave unit
1 = Master unit

Menu C: Cascade																			
	C	**2**				**B**	**u**	**s**		**a**	**d**	**d**	**r**	**e**	**s**	**s**			
											0								

Function for the cascading of the boiler(s).
This parameter determines the address of the boiler for the total cascading control.
Master = 0, Slave1 = 1, etc.

When the correct parameter is set, this must be confirmed at the confirmation screen. After activation, the value will blink for a few seconds while the parameter is programmed into the boiler.

When cascade connection is programmed correctly the boiler display will show the following.

Explanation "Cascade communication indicator"
NO CASCADE COMMUNICATION

>	>	>	no.1

Always showing the fixed ">>>"

CORRECT CASCADE COMMUNICATION

>		>	no.1
	>		no.2

Showing alternating no.1 & no.2 with 1 second interval.

11.3.2. MONITOR SCREENS

To obtain cascade information, see chapter 10.4.

11.3.3. OUTPUT CONTROL AND BOILER SEQUENCE

The total cascade set-up will act as one single big boiler, switching on- and off boilers, depending on the total load necessary to adjust and keep the flow temperature at the calculated value.
When the heat demand rises, more boilers are switched on, and when heat demand falls, one or more boilers will be switched off. The boiler that was switched on last, will be switched off first, see table below.

To distribute operating hours equally over all boilers, the working sequence of the boilers will change every two hours.

Hour	Switching ON sequence	Switching OFF sequence
X	Master – Slave 1 – Slave 2 – Slave 3 – Slave 4 – Slave 5 – Slave 6 – Slave 7	Slave 7 – Slave 6 – Slave 5 – Slave 4 – Slave 3 – Slave 2 – Slave 1 – Master
X+2	Slave 7 – Master – Slave 1 – Slave 2 – Slave 3 – Slave 4 – Slave 5 – Slave 6	Slave 6 – Slave 5 – Slave 4 – Slave 3 – Slave 2 – Slave 1 – Master – Slave 7
X+4	Slave 6 – Slave 7 – Master – Slave 1 – Slave 2 – Slave 3 – Slave 4 – Slave 5	Slave 5 – Slave 4 – Slave 3 – Slave 2 – Slave 1 – Master – Slave 7 – Slave 6
X+6	Slave 5 – Slave 6 – Slave 7 – Master – Slave 1 – Slave 2 – Slave 3 – Slave 4	Slave 4 – Slave 3 – Slave 2 – Slave 1 – Master – Slave 7 – Slave 6 – Slave 5
……..	……	……

Table: Boiler sequence example of an eight-boiler cascade.

In this table a total of eight boilers (one master, seven slaves) is mentioned as an example, in practice the maximum number in a cascade, without extra (external) control, is twelve boilers.

12. COMMISSIONING THE BOILER

12.1. First: flushing the boiler with water

After installation of the boiler the first step, before commissioning, is to flush the whole heating installation with fresh water to remove pollution, debris and other materials that might cause a blocking with the **S-CB PX isolated from the system.** This must also be done with heating installations, where only the boiler is replaced.

12.2. Second: filling & venting the boiler and the system

After flushing the boiler and the installation the system can be filled with fresh water. Fill the boiler and the heating system by using the appropriate filling valve. The water pressure of the system should be between a minimum of 1 bar and a maximum of 4 bar, also depending on the applied pressure safety valve.

NOTICE: Use the following aspects to prevent corrosion of the central heating system:

- Filling water: do not use any additives for the water of the central heating system. The pH value of the water should be more than 5 (If this pH value is less, please contact the supplier).
- Ensure that any used “plastic” pipes are oxygen diffusion-proof in accordance with DIN 4726/4729. If not, make sure that the boiler circuit is separated from the heating circuit by a plate heat exchanger. This way no oxygen that entered the heating system through these pipes can reach the boiler.
- Check the total heating system for any leaks. This to prevent oxygen entering the system through these leaks.

The boiler has an automatic air vent situated on top of the boiler (at the top panel). This vent must be opened during the filling of the boiler and the heating system to make sure that no air/oxygen is trapped in the heat exchanger of the boiler. NOTICE: Check that the screw cap has been loosened at least one twist. Shortly after putting the boiler into operation, check the water pressure and add or drain some water to obtain the required pressure. During these proceedings, make sure that no water can enter the boiler and make contact with the electrical parts.

12.3. Third: check the water flow

Before the boiler will be started it must be sure that the boiler pump is functioning and that there is a water flow over the heat exchanger. Check the electrical power supply of the boiler. When this is connected correctly, the display will show:

Display message	B	o	i	l	e	r		o	f	f										

Reason: Boiler is not active. To activate the boiler press [ON/OFF] button for <u>six</u> seconds.

Display message	H	E	A	T	I	N	G	:	b	o	i	l	e	r		o	f	f		
	>	>	>	:	1	2	3	.	4	°	C	(	1	2	3	.	4	°	C	)

Reason: Boiler is standby. To activate the boiler press [ON/OFF] button for <u>three</u> seconds.

Activate the boiler by pressing the [ON/OFF] button for six resp. three seconds. After this the following display will appear:

Display message	H	E	A	T	I	N	G	:	N	o		d	e	m	a	n	d			
	>	>	>	:	1	2	3	.	4	°	C	(	1	2	3	.	4	°	C	)

Reason: Boiler is active, but there is no heat demand.

When no water is present in the boiler or water pressure is too low/high, the boiler will go into lock-out and show a corresponding message in the display.

Display message	W	a	t	e	r	p	r	e	s	s	u	r	e		f	a	u	l	t	
												9	9	9	,	5		h	r	s

Reason Water pressure is too low or high.

By pressing the [SERVICE] button of the boiler, the boiler can be started without a heating demand. The boiler will start to fire and also the pump will start to run. Firing of the boiler without a water flow (but filled with water) will cause the so called “boiling noises”. Check during this “service function” operation also the flow and return temperatures of the boiler by pressing the [◀] button once. The temperature difference of the flow and return must be at least 13ºC and maximum 25ºC. This temperature difference indicates that there is a sufficient water flow over the boiler; this water flow protects the heat exchanger against possible damage caused by a thermal overload.

Another safety feature of the boiler, to make sure that there is enough water flow over the boiler, is the monitoring of the flow and return temperatures (T2 and T1). When the temperature difference (delta T) between the flow and return exceeds a certain (set) value, the following warning messages will be shown in the display.

Display message	**T**	**2**	**-**	**T**	**1**		**h**	**i**	**g**	**h**										
												9	**9**	**9**	**,**	**5**		**h**	**r**	**s**

Reason: Temperature difference T2-T1 has exceeded the blocking value, as set in the parameters.

Display message	**d**	**T**		**B**	**l**	**o**	**c**	**k**												
												9	**9**	**9**	**,**	**5**		**h**	**r**	**s**

Reason: Temperature difference between flow and return has exceeded the blocking value, but not the lock out value.

When the Delta T value exceeds the lock-out setting, the boiler will switch off and the following lock out code will be shown at the display.

Display message	**F**	**l**	**o**	**w**	**R**	**e**	**t**	**u**	**r**	**n**		**d**	**t**		**f**	**a**	**u**	**l**	**t**	
F16	**p**	**u**	**m**	**p**		**o**	**n**					**9**	**9**	**9**	**,**	**5**		**h**	**r**	**s**

Reason: Temperature difference between flow and return exceeds limitation value, or 'dT Block' has occurred 3 times.

When these messages appear and/or the boiler will lock out, it means that there is not enough flow over the boiler. In this case check the functioning of the pump.

The boiler has no built-in water flow switch. If there is the possible risk of a water flow blockage of the (external) heating system, the following pre-cautions can be taken to ensure a water flow over the boiler:

- Separate the boiler circuit from the (external) heating circuit by using a low loss header or plate heat exchanger.
- When the boiler is not equipped with an internal (built in) water pressure switch, install a water pressure switch externally, in series with the room thermostat.

During and after the commissioning of the boiler, the operation of the boiler pump must be checked, before leaving the installation room.

NOTICE: Always check the running of the pump before firing the boiler.

13. STARTING THE BOILER

13.1. General

The incoming gas pressure for the S-CB PX 120 appliance when operating in high fire must be more or equal to the minimum gas pressure against the fuel type, as stated within the technical specification sheet on pages 8 & 9.

The graph shows the position of the pressure nipple (3) for the boiler:

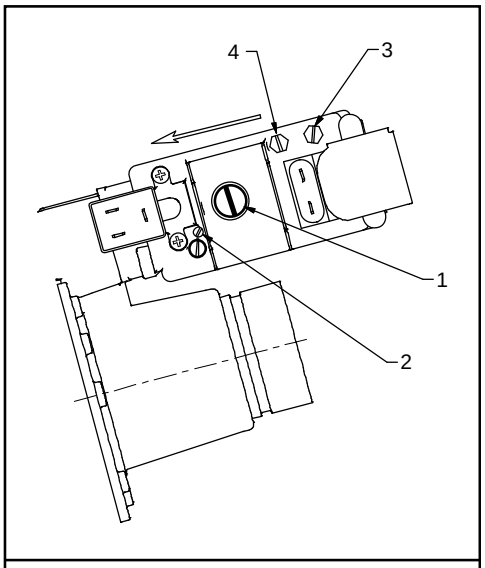

Strebel S-CB PX 120

13.2. Firing for the first time

After the commissioning of the boiler and the described previous actions, the boiler display will show the following graph.

Display message	**H**	**E**	**A**	**T**	**I**	**N**	**G**	**:**	**N**	**o**		**d**	**e**	**m**	**a**	**n**	**d**			
	>	**>**	**>**	**:**	**1**	**2**	**3**	**.**	**4**	**°**	**C**	**(**	**1**	**2**	**3**	**.**	**4**	**°**	**C**	**)**

Reason: Boiler is active, but there is no heat demand.

The display describes:

- The actual operation for heating or hot water
- If a heat demand is activated
- The temperature setting
- The temperature measured

When mounting the bottom part of the siphon, before commissioning the boiler and/or after maintenance, the siphon must **ALWAYS** be completely filled with water.

This is a safety measure: the water in the siphon keeps the flue gases from leaking into the plant room via the condensate drain.

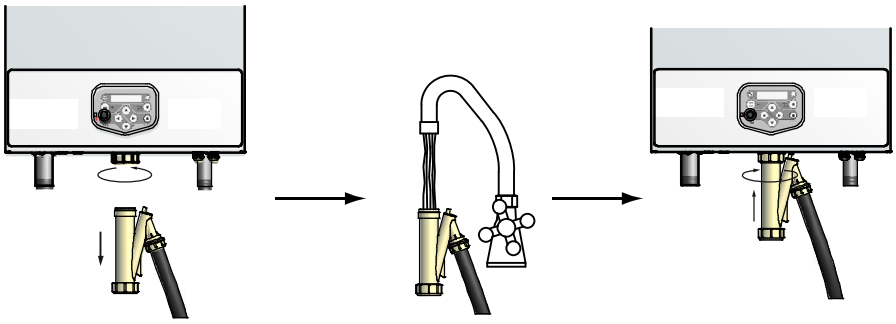

14. ADJUSTING AND SETTING THE BURNER

Before carrying out any adjusting of the burner, carefully read this complete chapter.

14.1. Introduction

The burner must always be adjusted in the next situations:

A. - A new boiler is installed
- As part of a service/maintenance check, in case the CO_2 values turn out to be incorrect.

B. - The gas control safety valve has been (re)placed
- Another type of gas is applied: gas conversion

Adjustment procedures for situation **A** *are described in chapter* **14.2** *and for situation chapter* **14.3**

In either of the four cases described in **A** and **B**, always check the gas/air ratio of the combustion figure (CO_2) at maximum and minimum input. First set the boiler at max. load and subsequently at min. load, and repeat if necessary.

14.1.1. ADJUSTMENT TABLES

Table 1: CO_2 values for maximum and minimum load. [2)]

	CO_2 [%]			**O_2 [%]**	
Gas type [1)]	max load	min load		max load	min load
G20, G25.3	9,0 - 9,2	8,3 - 8,5		4,5 - 4,8	5,7 - 6,0
Propane[3)] G31	10,3 - 10,5	9,4 – 9,6		4,9 - 5,2	6,2 – 6,5
B/P [3,4)] G30/ G31	10,4 - 10,6	9,4 – 9,6		5,0 - 5,3	6,5 – 6,8

1 Cf. EN437.
2 All values measured without front door. The CO_2 / O_2 values should always be between the values set in this table. Nominal values can be found in Technical specifications datasheet page.
3 Butane, propane or B/P mixtures only with air restrictor and venturi directly mounted on the fan, see also instruction for butane/propane kit. **A butane/propane (B/P) kit is needed,** see accessories list.
4 B/P: Propane/butane mixture.

To use another type of gas with the boiler, a conversion kit for butane/propane is needed, which consists of an air restrictor and an O-ring to air tighten the gap between the fan and the venturi. Changing of gas type involves a different calorific value and composition of the gas. Adjust the gas valve.

14.1.2. ADJUSTMENT VALUES

To make adjustments easier, values of table 1 are presented in the following figures.
The CO_2 / O_2 values should always be between the values set in this figure.
Nominal values can be found in the Technical specifications table at the beginning of this manual.
All values are measured without front door.

Gas type G20, G25.3

The CO_2 level may never be in the hatched area.

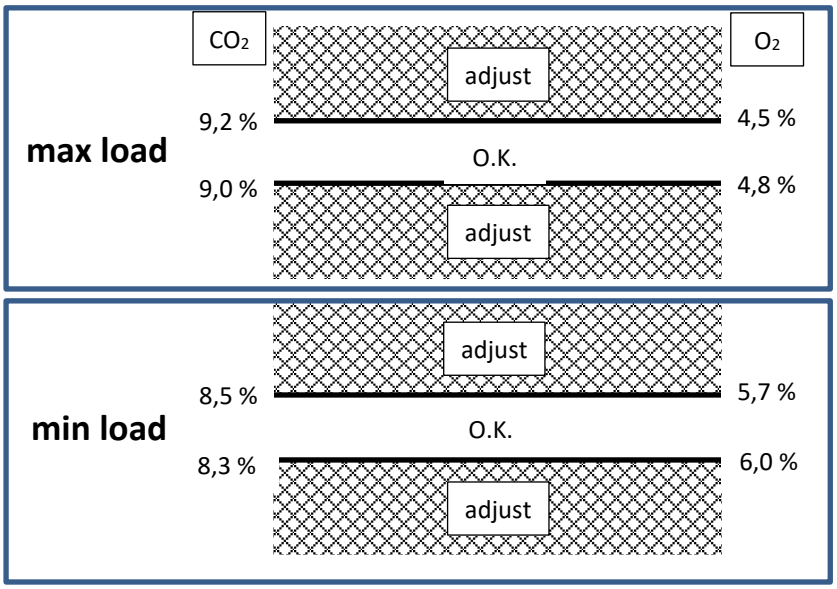

Propane G31:

Boiler has to be adapted by using a gas conversion kit. (only by a skilled mechanic).
The CO_2 level may never be in the hatched area.

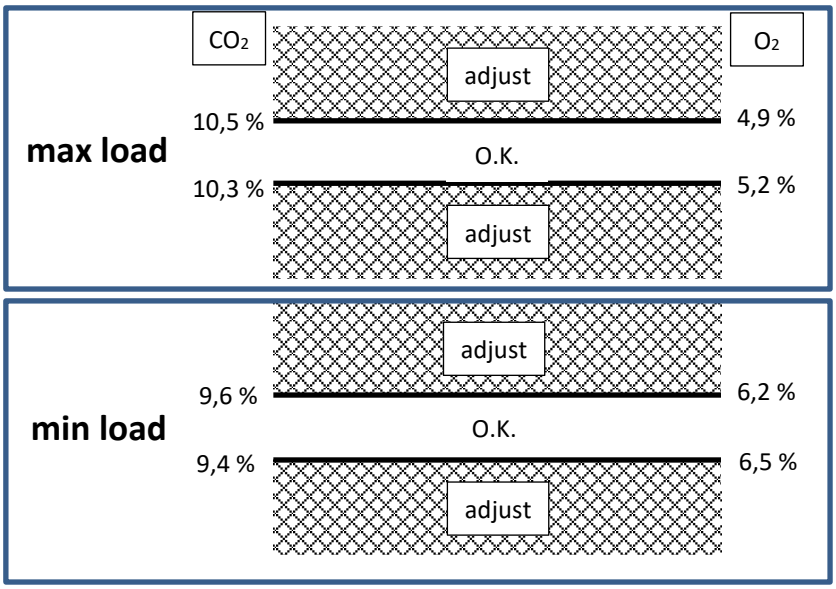

B/P: propane/ butane mixture G30/ G31:

Boiler has to be adapted by using a gas conversion kit. (only by a skilled mechanic).
The CO_2 level may never be in the hatched area.

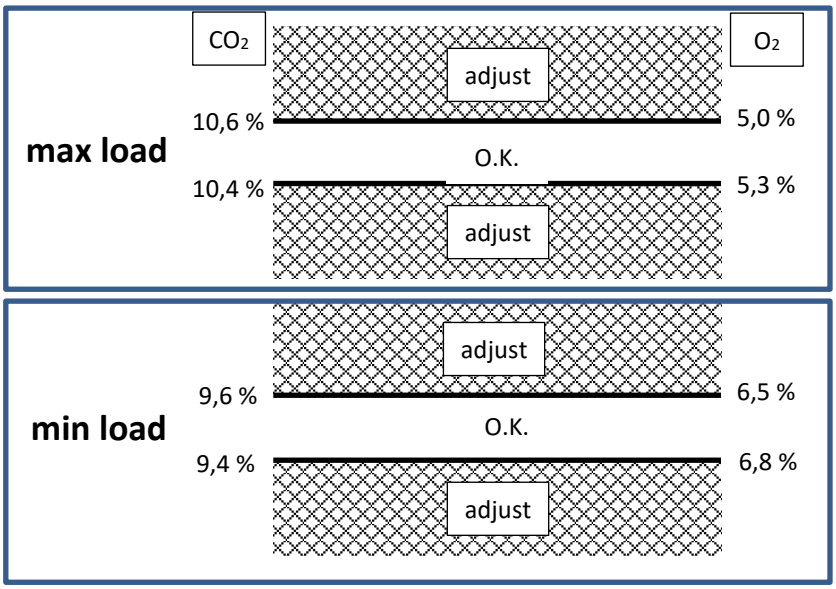

14.1.3. SETTING SCREWS GAS VALVE: DRAWING

NOTICE: Do NOT mistake the screw marked 'PILOT' for screw 2.
→ Screw 2 is the SMALL screw immediately next to the pilot screw.

Number 3 is the gas pressure input measuring nipple.

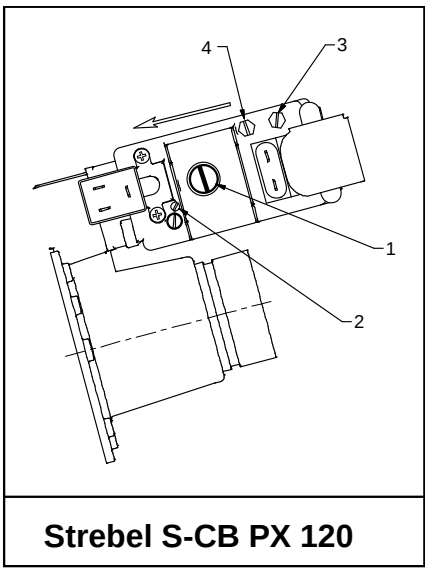

Strebel S-CB PX 120

Table 2 pre-adjustment settings gas valves *(G27 for Poland)*

Boiler Model	number of turns open (counter clockwise)		
	Nat. gas G20 / G25.3 / G27	Propane G31	Butane/Propane B/P G30/G31
S-CB PX 120	2,25 *	1 *	0,75 *

14.1.4. ADJUSTMENT ACTIONS: GENERAL SCHEME

General scheme for adjustment of the gas valve(s). Check this scheme for an overview.
To complete all necessary adjustments in right order, follow case **A** <u>or</u> **B** top-down through the scheme (**B** involves a few extra steps (grey text blocks):

GENERAL SCHEME SETTING STEPS		
	Case A New boiler or service check	**Case B** Valve replacement or gas conversion
	continue ↓	First close screw [2], then set it according table 2
SWITCH TO SERVICE MODE		
	continue ↓	If burner doesn't start, open screw[2] ¼ turn extra
	Setting at maximum load	
Procedure 1	[▲] Set burner at maximum load	
	Measure CO_2 at flue gas outlet; use screw [2] to adjust according table 1 or figures. CO2 ↓ [2] CO2 ↑ [2]	
	Setting at minimum load	
Procedure 2	[▼] Set burner at minimum load	
	Measure CO_2 at flue gas outlet; Use screw [1] to adjust according table 1 or figures. CO2 ↓ [1] CO2 ↑ [1]	
Repeat procedure 1		
Repeat procedure 2		
Keep repeating until values match table values best		
Boiler returns to NORMAL MODE after 40 min. OR by pressing [SERVICE] button		

14.2. Adjusting in case of a new boiler, or after maintenance (case A)

14.2.1. General remark

For all adjusting steps under **A** the measured CO_2 values shall be according table 1 or figures

14.2.2. Checking and adjusting at maximum load

Adjust at maximum load by carrying out procedure 1.

14.2.3. Checking and adjusting at minimum load

Adjust at minimum load by carrying out procedure 2.

14.3. Adjusting in case of valve replacement or gas conversion (case B)

To use another type of gas with the boiler, a conversion kit for butane/propane is needed, which consists of an air restrictor and an O-ring to air tighten the gap between the fan and the venturi. Changing of gas type involves a different calorific value and composition of the gas. Adjust the gas valve.

14.3.1. General remarks

All adjustments must result in CO_2 according table 1 or figures.

14.3.2. Checking and adjusting at maximum load

The S-CB PX 120 has a single gas valve, see the drawings.

- First, turn setting screws [2] clockwise until you feel resistance. This means that the valve is closed, do not try to tighten the screw any further in the closed position.
- After this, turn screw [2] counter clockwise (open), according to the number of turns in table 2 for the used boiler and gas type.

Adjust the valve at maximum load by carrying out procedure 1.
If the burner doesn't start up in service mode, turn screw [2] a quarter turn counter clockwise (open), and try again.

14.3.3. Checking and adjusting at minimum load

Adjust at minimum load by carrying out procedure 2.

IMPORTANT: Toggle between high fire and low fire to make fine-tuning adjustments (adjusting the minimum setting affects the maximum setting and contrariwise).

14.4. Adjusting procedures

Procedures 1 and 2, referred to in the previous chapters 14.2 and 14.3, are described below:

Procedure 1: adjust at maximum load
*In case **B** (replacement of gas valve or gas conversion): consult chapter 14.3. before starting procedure 1 below.*

Carry out the next 4 steps:

1. Press [SERVICE] button for about 3 seconds.

Display message	**H**	**E**	**A**	**T**	**I**	**N**	**G**	**:**	**S**	**e**	**r**	**v**	**i**	**c**	**e**			**2**	**6**	**%**
	>	**>**	**>**		**1**	**2**	**3**	**.**	**4**	**°**	**C**	**(**	**1**	**2**	**3**	**.**	**4**	**°**	**C**	**)**

Boiler is activated and operates at service mode at 26% (minimum). (example)

2. Press [▲] button until maximum load is reached:

Display message	**H**	**E**	**A**	**T**	**I**	**N**	**G**	**:**	**S**	**e**	**r**	**v**	**i**	**c**	**e**		**1**	**0**	**0**	**%**
	>	**>**	**>**		**1**	**2**	**3**	**.**	**4**	**°**	**C**	**(**	**1**	**2**	**3**	**.**	**4**	**°**	**C**	**)**

Boiler is activated and operates at service mode at 100% (maximum). (example)

3. Measure the CO_2 percentage at the flue gas outlet.
4. By setting screw [2], adjust the gas valve to obtain the CO_2 value of table 1 or the figures.

Decrease CO_2 percentage	CO2 ↓ [2]	**Turn screw [2] right (clockwise)**
Increase CO_2 percentage	CO2 ↑ [2]	**Turn screw [2] left (counter clockwise)**

The service operation of the boiler will be active for 40 minutes.
After this period the boiler will return to normal operation.

Procedure 2: adjust at minimum load
*In case **B** (gas conversion or replacement of gas valve): consult chapter 14.3. before starting procedure 2 below.*

Carry out the next three steps:

1. Press [▼] button until minimum load is reached.

Display message	H	E	A	T	I	N	G	:	S	e	r	v	i	c	e			2	6	%
	>	>	>		1	2	3	.	4	°	C	(	1	2	3	.	4	°	C	)

Boiler is activated and operates at service mode at 26% (minimum).

2. Measure the CO_2 percentage at the flue gas outlet.
3. By setting screw [1], adjust the gas valve to obtain the CO_2 value of table 1.

Decrease CO_2 percentage	CO2 ↓ [1]	**Turn screw [1] left (counter clockwise)**
Increase CO_2 percentage	CO2 ↑ [1]	**Turn screw [1] right (clockwise)**

Additional measurement at minimum load.
In the table, a CO_2 percentage is specified at which the gas valve must be set, with the boiler operating at minimum load.
This setting of the gas valve is in general a good procedure to get a good gas/air ratio.
But to ensure a good setting at minimum load we also advice to check the pressure at measuring point 4 on the gas valve, while the unit is firing at minimum load at the specified CO_2 setting, so after setting screw [1].
To do this, remove the screw on measuring point 4 from the gas valve and connect a pressure measuring device (manometer) to it.
When the CO_2 has been set to the specified value at minimum load, one must measure a negative pressure: **-10 ± 3 Pa**. This measured pressure is valid for natural gas, propane and propane/butane mixtures.

If the measured pressure is not within this range, check the complete gas/air unit, consisting of the gas valve, venturi, fan and burner plate, for defects and/or mounting errors. Also make sure that the measuring devices, both CO_2 meter and manometer, are functioning well.

NOTICE: After the setting has been done at minimum load, go back to maximum load and check if it still gives the right CO_2 level as specified for maximum load in the table; adjust the gas valve if necessary.
After readjustment go back to minimum load and check again the CO_2 level and gas valve pressure; adjust if necessary.
Keep toggling between maximum load and minimum load up to the point that no adjustments are needed anymore and the CO_2 levels and gas valve pressure are within the specified ranges.

After these adjustments, return to normal operation by pressing the [SERVICE] button.

IMPORTANT: Make sure that the screw(s) on the measuring points are mounted again, after the work on the gas valve has been finished.

14.5. Gas conversion propane or B/P

To use another type of gas with the boiler, only a conversion kit for butane/propane is needed, which consists of an air restrictor and an O-ring to air tighten the gap between the fan and the venturi. This changing of gas type involves a different calorific value and composition of the gas. Change the settings of the gas valve.

For example propane.
Take the following actions:

1. Mount the air restrictor kit as described below on this page and Set the gas valve:
2. Turn the adjusting screw [2] three full strokes around (clockwise).
3. Press the [SERVICE] button for about 3 seconds to start up the boiler in service mode.
4. When, after several starting attempts, the burner does not ignite and start to burn, turn the adjusting screw [2] one quarter stroke back (counter clockwise) and start service mode again.
5. When the burner ignites, and starts to burn, continue the setting of the gas valve at maximum and minimum load, as described in the previous chapters and use the values for Gas G31.

See 14.1.1: Adjustment tables Table 1: CO_2 and O_2 values for maximum and minimum load [2]).

	CO2 [%]			**O2 [%]**	
Gas type [1)]	max. load	min. load		max. load	min. load
Propane[3)] G31	10,3 - 10,5	9,4 – 9,6		4,9 - 5,2	6,2 – 6,5

1 According EN437.
2 All values measured without front door. The CO_2 / O_2 values should always be between the values set in this table. Nominal values can be found at the Technical specifications datasheet page.
3 Propane or B/P mixtures only with air restrictor and venturi directly mounted on the fan, see also instruction for butane/propane kit. **A butane/propane (B/P) kit is needed,** see accessories list

To use another type of gas with the boiler, a conversion kit for butane/propane is needed, which consists of an air restrictor and an O-ring to air tighten the gap between the fan and the venturi. Changing of gas type involves a different calorific value and composition of the gas. Adjust the gas valve.

Instructions for butane/propane kit application

The air restrictor is a plastic cap with a slit in it. To apply it, follow the next steps (see picture below):

- Disassemble the complete burner door unit, as described in chapter 17.2.
- Loosen the three screws (1) that connect the venturi to the fan.
- Remove the plastic 'ring' (2) from the fan, and replace it by the O-ring (3), supplied with the butane/propane air restrictor kit.

NOTICE: It is important to discard the plastic ring (2), to ensure that the venturi is mounted air-tight onto the fan.

- Put the air restrictor itself (4) completely over the venturi inlet opening and secure it with the supplied clamp(5).

NOTICE: Make sure that the air restrictor is placed correctly: it should have the slit horizontal when the other components have the orientation as in the picture.

- Reassemble both the burner door unit on the heat exchanger and the venturi with air restrictor on the fan.

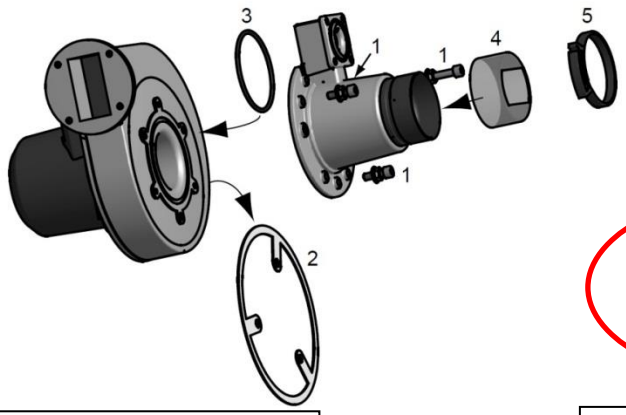

1. Venturi screws
2. Plastic ring.
3. O-ring
4. Air restrictor
5. Clamp

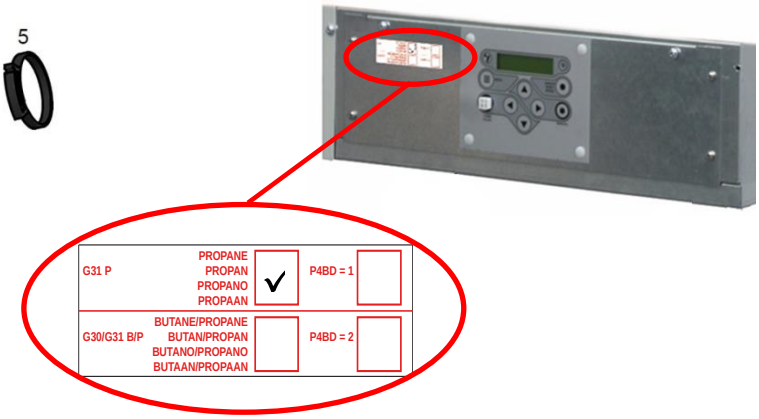

In case of gas conversion, paste the corresponding sticker at the appropriate position in the boiler and mark the square for the used gas type.
Because it is not necessary to set parameter P4BD leave the square for parameter B4BD blank.

15. PUTTING THE BOILER OUT OF OPERATION

It is recommended to have the boiler operational all year around to prevent any frost damage during the winter and/or rotating parts getting jammed during other times of the year (built in boiler safety features).

15.1. Out of operation: on/off function

To be used when the appliance must be put out of operation for a long period because of a defect or another safety risk.

Act as follows:

- Disconnect or switch off the room thermostat and/or other external controllers from the boiler. The CH pump and fan will stop after a short time.
- Switch off the boiler by pressing the [ON/OFF] button for six seconds.
- Make sure that the following display screen is visible.

Display message	**B**	**o**	**i**	**l**	**e**	**r**		**o**	**f**	**f**										

Properties of the ‘off’ function:

- The keys do NOT respond and the menu is NOT accessible.
- The burner does NOT respond to an external heat demand.
- The boiler CAN, however, be switched on again by pressing the [ON/OFF] button.
- Pumps, fans and cascade (if applicable) are operational, and so are both recirculation protection (if applicable) and frost protection.
- NOTICE: Pump 3 (CH pump) is switched OFF, but this is NOT the case when the boiler is in a cascade.
- To reactivate the boiler, switch on the burner by pressing [ON/OFF] for six seconds again.

The frost protection module can still activate the burner.
To prevent this, switch off this protection or put the boiler in ‘power off’ mode.

15.2. Out of operation: power off

To assure that the boiler cannot become active at all anymore, power should be cut off completely.

Act as follows:

- Disconnect or switch off the room thermostat and/or other external controllers from the boiler. The CH pump and fan will stop after a short time.
- Switch off the boiler by pressing the [ON/OFF] button for six seconds.
- Make sure that the following display screen is visible.

Display message	**B**	**o**	**i**	**l**	**e**	**r**		**o**	**f**	**f**										

- Switch off the electrical power supply of the boiler (remove connection from the wall socket, or switch off the main power).
- Close the gas valve / gas supply.
- In case of possible frost damage: drain both the boiler and the heating system.

NOTICE: Before starting to drain the boiler, first start draining the heating system and subsequently open also the two drains of the boiler.

16. FAULT CODES AND BLOCKING CODES

16.1. Fault codes

IMPORTANT:
To avoid electric shocks, disconnect electrical supply before performing troubleshooting. To avoid burns, allow the unit to cool before performing troubleshooting. Be aware that a fault code is an indication that the unit or the system needs attention. When repeatedly having faults these should not be neglected. The first step is to check if the unit is installed according to the instructions. If not, first make sure the installation complies with the installation manual. Always check the fuses on the control board before replacing any major components. A blown fuse can prevent the controller or other components from operating. Most faults can also be caused by a bad wiring and/or connections, even if it is not specifically mentioned. With every fault it is wise to check wiring and connections (at both ends) that connect to the safety device/component that generates the fault.

LOCK-OUT CODES:

Having a lockout means that the boiler needs a manual reset to start operating again.
When the boiler is in lockout the backlight of the display is blinking on and off.

Explanation > **9 9 9 , 5 : h r s** = time elapsed after fault/message.

Explanation > **P u m p 1 o n** = status of the pump during fault.

Display message	C	l	i	x	o	n		F	a	u	l	t								
F15	p	u	m	p		o	n					9	9	9	,	5		h	r	s
Reason	Heat exchanger fuse or burner door clixon exceeded maximum allowed value.																			
Cause: The thermal fuse of the heat exchanger has opened permanently.																				
Corrective action:																				
Switch off the electrical power and gas supply and contact supplier.																				
Cause: The burner door clixon has opened.																				
Corrective action:																				
Remove the burner door of the heat exchanger and check the burner door gasket for leakage. Check the burner door for deformation; when it deforms it must be replaced. Check the heat exchanger for dirt and check that the flue is not blocked. If heat exchanger is clean, reset manually the clixon itself and reset the boiler.																				

Display message	F	a	i	l	e	d		b	u	r	n	e	r		s	t	a	r	t	
F8	p	u	m	p		o	n					9	9	9	,	5		h	r	s
Reason	Boiler not operational after 4 starting attempts.																			
Cause: No spark.																				
Corrective action:																				
Check the ignitor/ignition electrode and replace/clean it if necessary. Check the state of the ceramic insulator. A small crack can prevent the spark to form at the end of the electrode. Check the distance between the electrode pin, earth pin and burner. Check the state of the ignition cable and replace it if necessary. Check the state of the earth wire/connection of the ignitor and replace it if necessary. Check the state of the sparkplug cap and replace it if necessary. Check power supply. Voltage must be 230 Vac nom. Check for proper electrical grounding of unit. Bad ignition transformer. Replace the burner control of the unit.																				

F8 →

Cause:
Ignition spark, but no flame.
Corrective action:
Check if all gas valves in the supply line are completely open. Check if there is no air in the gas supply (start-up new systems). Check if the gas valve opens. When there is power supply to the gas valve, but the valve does not open, the gas valve must be replaced. Check if the gas valve opens. When there is no power supply to the gas valve check the gas valve wiring/connections. Check if the gas valve settings are correct and adjust if necessary. Check if the gas pressure is correct and sufficient. Check if the air supply is open/not blocked.
Cause:
Flame, but not enough ionisation to establish the flame.
Corrective action:
Check the ignitor/ignition electrode and replace/clean it if necessary. Check the state of the ceramic insulator. Check the distance between the electrode pin, earth pin and burner. Check the state of the ignition wire (also the ionisation wire) and replace it if necessary. Check the state of the earth wire/connection of the ignitor and replace it if necessary. Check for proper electrical grounding of unit. Check power supply. Voltage must be 230 Vac nom. Check the state of the sparkplug cap and replace it if necessary.

Display message	**F**	**a**	**l**	**s**	**e**		**f**	**l**	**a**	**m**	**e**		**s**	**i**	**g**	**n**	**a**	**l**		
F10	**p**	**u**	**m**	**p**		**o**	**n**					**9**	**9**	**9**	**,**	**5**		**h**	**r**	**s**
Reason	Flame signal detected, while boiler should not fire for operation.																			
Cause:																				
The flame detection circuit detects a flame which is not supposed to be present.																				
Corrective action:																				
Check the ignition/ionisation electrode and make sure it is clean (or replace it). Check the power supply voltage for a correct polarity. Check the power supply for bad frequency or voltage peaks. Check external wiring for voltage feedback. Check the internal wiring for bad connections. Check if the gas valve is closing correctly. Replace the burner control.																				

Display message	**F**	**a**	**n**		**s**	**p**	**e**	**e**	**d**		**i**	**n**	**c**	**o**	**r**	**r**	**e**	**c**	**t**	
F11	**p**	**u**	**m**	**p**		**o**	**n**					**9**	**9**	**9**	**,**	**5**		**h**	**r**	**s**
Reason	Actual fan speed differs from the unit rpm set point.																			
Cause:																				
An incorrect fan speed is detected.																				
Corrective action:																				
Check the 4-wired wiring and connections at the fan and at the main control board. Check the 3-wired power supply wiring and connections at both ends. Replace the fan. Replace the main control board.																				

Display message	**F**	**l**	**a**	**m**	**e**		**l**	**o**	**s**	**t**										
F9	**p**	**u**	**m**	**p**		**o**	**n**					**9**	**9**	**9**	**,**	**5**		**h**	**r**	**s**

Reason	Flame signal lost during operation.

Cause: Bad gas supply pressure

Corrective action:

Be aware that the specified gas pressure must be met during all operation conditions.
Check if all gas valves in the supply line are completely open.
Check if the dirt filters mesh in the gas valve inlet is clean.
Check if the external dirt filter in the gas supply line is not blocked.
Check if an external gas pressure regulator is selected/installed correctly.
Check the gas pressure that is supplied to the building > call the supplier if necessary.

Cause: Bad gas valve or gas valve settings.

Corrective action: Check and set gas valve settings.

Cause: Bad electrode, electrode wiring/connection (bad ionisation signal).

Corrective action:

Check ionisation signal.
Check the ignitor/ignition electrode and replace/clean it if necessary.
Check the state of the ceramic insulator.
Check the distance between the electrode pin, earth pin and burner.
Check the state of the ignition wire (is also ionisation wire), and replace if necessary
Check the state of the ignitor earth wire/connection and replace it if necessary.
Check for proper electrical grounding of unit.

Cause: Bad flue gas and/or air supply system.

Corrective action:

Check if the design of the flue gas and air supply system complies with the max. combined resistance as specified.
Check if the flue gas and air supply system is installed according a good installation practice by a skilled installer.
Check all seals in the flue gas and air supply system.

Cause: External factors.

Corrective action:

Check if there were extreme weather/wind conditions when the fault occurred.
Check if the boiler room pressure is equal to the pressure at the position of the flue gas outlet. (When combustion air is drawn from the boiler room).

Display message	**F**	**l**	**o**	**w**		**h**	**i**	**g**	**h**		**T**	**e**	**m**	**p**						
F1	**p**	**u**	**m**	**p**		**o**	**n**					**9**	**9**	**9**	**,**	**5**		**h**	**r**	**s**

Reason	Max. flow temperature exceeds limitation (lock-out) value.

Cause: The water flow is restricted.

Corrective action:

Check functioning of the pump.
Check/open all valves that might restrict the water flow through the unit.
Check for an external system pump that influences flow through the unit.
Check if the system resistance exceeds the spare capacity of the unit pump.

Display message **F16**	F	l	o	w	R	e	t	u	r	n		d	t		f	a	u	l	t
	p	u	m	p		o	n					9	9	9	,	5		h	r	s
Reason:	Temperature difference between flow and return exceeds limitation value, or 'Heatexchang at Risk' has occurred 3 times.																		
Cause: The water flow through the unit is too low.																			
Corrective Action:																			
Check functioning of the pump. Check/open all valves that might restrict the water flow through the unit. Check for an external system pump that influences the flow through the unit. Check if the system resistance exceeds the spare capacity of the unit pump. Make sure the heat exchanger is clean. Heat exchanger fouling (partly blockage) will increase the resistance causing the water flow to drop.																			

Display message **F0**	F	l	o	w		s	e	n	s	o	r		e	r	r	o	r		
	p	u	m	p		o	n					9	9	9	,	5		h	r	s
Reason	Flow sensor is not detected.																		
Cause:																			
Bad wiring/connection in the flow sensor circuit.																			
Corrective action:																			
Check for loose wiring/connections in the flow sensor circuit.																			
Cause:																			
Bad temperature sensor causing a fault signal.																			
Corrective action:																			
Replace flow sensor.																			

Display message **F6**	F	l	u	e		s	e	n	s	o	r		e	r	r	o	r		
	p	u	m	p		o	n					9	9	9	,	5		h	r	s
Reason	Flue sensor is not detected by the boiler PCB.																		
Cause:																			
Bad wiring/connection in the flue gas sensor circuit.																			
Corrective action:																			
Check for loose wiring/connections in the flue gas sensor circuit.																			
Cause:																			
Bad temperature sensor causing a fault signal.																			
Corrective action:																			
Replace flue gas sensor.																			

Display message	F	l	u	e		t	e	m	p		t	o	o		h	i	g	h		
F7	p	u	m	p		o	n					9	9	9	,	5		h	r	s
Reason	Flue gas temp. exceeded 3 times limitation value within a certain period.																			
Cause:																				
Heat exchanger polluted and not able to transfer enough heat to system water.																				
Corrective action:																				
Check and clean heat exchanger.																				
Cause:																				
Bad flue gas sensor or sensor connection (partly shorted).																				
Corrective action:																				
The sensor is of the type NTC. This means if the temperature rises the resistance lowers. A partly shorted sensor will drop its resistance and therefore 'measure' a raise in temperature when actually there is none. Check for moist in the sensor connections or replace sensor.																				
Cause:																				
There is no water in the unit while firing.																				
Corrective action:																				
This is an unlikely situation while all the safeties for checking the water presence didn't detect anything. Only a lot of air in the system/unit (under pressure) can cause the water pressure switch to switch while no water is present. Also the water leak detection did not react. Bleed all air from the unit so the heat from combustion can be transferred to the water and won't leave through the flue system.																				
Cause:																				
Heat exchanger failure.																				
Corrective action:																				
This is an unlikely situation but when there is severe damage to the heat exchanger, the combustion product will not be able to transfer all heat to the system water. The heat that is not transferred will convert to an increased flue gas temperature.																				

Display message	P	a	r	a	m	/	H	a	r	d	w		f	a	u	l	t			
F13	p	u	m	p		o	n					9	9	9	,	5		h	r	s
Reason	Failure during programming of the parameters.																			
Cause:																				
Programming of the parameters NOT successfully completed.																				
Corrective action:																				
Unit is not in stand-by mode (fan must not run during programming). Check programming wire and connections and try again. Check if the software complies with the PCB. Replace the programming wire. Replace the display PCB.																				

Display message	p	r	o	g	r	a	m	m	i	n	g		e	n	d					
F12	p	u	m	p		o	n					9	9	9	,	5		h	r	s
Reason	Programming of the parameters completed successfully.																			
Cause:																				
Programming of the parameters completed successfully.																				
Corrective action:																				
This message occurs to confirm the end of programming. Pressing RESET will return the unit in normal operating status.																				

Display message	R	e	t	u	r	n		h	i	g	h		T	e	m	p				
F1	p	u	m	p		o	n					9	9	9	,	5		h	r	s
Reason	Maximum return temperature exceeds limit value.																			
Cause:																				
Systems that pre-heats the boiler return temperature too much/high.																				
Corrective action:																				
Reduce pre-heat temperature of external heat source.																				
Cause:																				
The need for heat in the system suddenly drops causing hot return water to the boiler.																				
Corrective action:																				
Dampen external heating system control to prevent sudden boiler temperature rise.																				

Display message	R	e	t	u	r	n		s	e	n	s	o	r		e	r	r	o	r	
F3	p	u	m	p		o	n					9	9	9	,	5		h	r	s
Reason	Return sensor is not detected by the boiler PCB.																			
Cause:																				
Bad wiring/connection in the return sensor circuit.																				
Corrective action:																				
Check for loose wiring/connections in the return sensor circuit.																				
Cause:																				
Bad temperature sensor causing a fault signal.																				
Corrective action:																				
Replace return sensor.																				

Display message	W	a	t	e	r		h	i	g	h		l	i	m	i	t				
F17	p	u	m	p		o	n					9	9	9	,	5		h	r	s
Reason	Maximum thermostat exceeds limitation value.																			
Cause:																				
The water flow is restricted.																				
Corrective action:																				
Check functioning of the pump. Check/open all valves that might restrict the water flow through the unit. Check for an external system pump that influences the flow through the unit. Check if the system resistance exceeds the spare capacity of the unit pump.																				

16.2. Blocking codes

The display is not blinking, but is lightened up during the blocking period.
The boiler is blocking an action, because of an extraordinary situation. This action will be continued after stabilisation of this situation.

Display message	A	n	t	i	c	y	c	l	e		t	i	m	e						
												9	9	9	,	5		h	r	s
Reason	The controller received a new heat demand too fast after the last ended demand.																			
Cause: Immediately opening and closing of the external thermostat																				
Corrective action:																				
Controlled water flow cools down too quickly after loss of heat demand. Controlled water flow heats up too quickly after start of heat demand. Immediately opening and closing of the external thermostat. Check switching differential of the ON/OFF thermostat. Controller settings need to be changed. Be aware that the standard settings work fine for all common systems. When anti-cycling is active, because of immediate heating or cooling of the controlled water flow/temperature, it concerns an unconventional system.																				

Display message	**C**	**a**	**s**	**c**	**a**	**d**	**e**		**B**	**l**	**o**	**c**	**k**							
												9	**9**	**9**	**,**	**5**		**h**	**r**	**s**
Reason	Connection failure with one of the boilers of the cascade.																			
Cause:																				
The unit is programmed in such a way that none of the boilers in a cascade will fire, if one has a lock-out. One unit has a lock-out and therefore the whole cascade is blocked.																				
Corrective action: Troubleshoot the fault of the unit in lock-out.																				

Display message	**D**	**e**	**a**	**i**	**r**	**a**	**t**	**i**	**o**	**n**										
												9	**9**	**9**	**,**	**5**		**h**	**r**	**s**
Reason	The boiler starts it deairation function.																			
Cause: Automatic function starts after boiler is powered or/and parameter P4AJ is set.																				
Corrective action:																				
No corrective action needed, boiler will return to normal operation after deairation cycles.																				

Display message	**d**	**T**		**B**	**l**	**o**	**c**	**k**												
												9	**9**	**9**	**,**	**5**		**h**	**r**	**s**
Reason	Temperature difference between flow and return has exceeded the blocking value, but not the lock out value.																			
Cause: The water flow through the unit is too low.																				
Corrective action:																				
Check functioning of the pump. Check/open all valves that might restrict the water flow through the unit. Check for an external system pump that influences the flow through the unit. Check if the system resistance exceeds the spare capacity of the unit pump. Make sure the heat exchanger is clean. Heat exchanger fouling (partly blockage) will increase the resistance causing the water flow to drop.																				

Display message	**F**	**l**	**o**	**w**		**t**	**e**	**m**	**p**		**h**	**i**	**g**	**h**						
												9	**9**	**9**	**,**	**5**		**h**	**r**	**s**
Reason	Flow temperature has exceeded the blocking temperature, but it has not exceeded the lock-out value.																			
Cause: The water flow is restricted.																				
Corrective action:																				
Check functioning of the pump. Check/open all valves that might restrict the water flow through the unit. Check for an external system pump that influences the flow through the unit. Check if the system resistance exceeds the spare capacity of the unit pump.																				

Display message	**F l u e t e m p h i g h** **9 9 9 , 5 h r s**
Reason	Flue gas temperature has exceeded the limit.
Cause:	
Heat exchanger polluted and not able to transfer enough heat to the system water.	
Corrective action:	
Check and clean heat exchanger.	
Cause:	
Bad flue gas sensor or sensor connection (partly shorted.)	
Corrective action:	
The sensor is of the type NTC. This means when the temperature rises, its resistance decreases. A partly shorted sensor will drop its resistance and therefore 'measure' a raise in temperature when actually there is none. Check for moist in the sensor connections or replace the sensor.	
Cause:	
There is no water in the unit while firing.	
Corrective action:	
This is an unlikely situation while all the safeties for checking the water presence didn't detect anything. Only a lot of air in the system/unit (under pressure) can cause the water pressure switch to switch while no water is present. Also the water leak detection did not react. Bleed all air from the unit so the heat from combustion can be transferred to the water and won't leave through the flue system.	
Cause:	
Heat exchanger failure.	
Corrective action:	
This is an unlikely situation but when there is severe damage to the heat exchanger, the combustion product will not be able to transfer all heat to the system water. The heat that is not transferred will convert to an increased flue gas temperature.	

Display message	**G e n B l o c k** **9 9 9 , 5 h r s**
Reason	General blocking circuit is activated during operation (general blocking contacts 7-8).
Cause:	
The circuit connected to the general blocking terminals is not closed.	
Corrective action:	
Check all external components that are connected to the general blocking terminals and check why the contact is not closing during heat demand.	
Cause: If used in combination with flow switch:	
The water flow through the unit is too low.	
Corrective action:	
Check functioning of the pump and the flow switch. Check/open all valves that might restrict the water flow through the unit. Check for an external system pump that influences flow through the unit. Check if the system resistance exceeds the spare capacity of the unit pump. Make sure the heat exchanger is clean. Heat exchanger fouling (partly blockage) will increase the resistance causing the water flow to drop.	

Display message	**L i n e f a u l t** **p u m p o n 9 9 9 , 5 h r s**
Reason	Bad power supply
Cause:	
The supplied power does not comply with the specifications.	
Corrective action:	
Check if the power supply is connected correctly to the unit. Check the voltage and frequency. (Should be Life Neutral, Gnd > 230Vac/50Hz). Make sure there is no signal fail or voltage peaks in the power supply.	

Display message	**O u t d o o r s e n s o r f a i l**
	9 9 9 , 5 h r s
Reason	No outdoor sensor detected.
Cause:	
The unit is programmed to check if an outdoor sensor is present and does not detect an outdoor sensor.	
Corrective action:	
Check for loose wiring/connections in the outdoor sensor circuit. Check the state of the outdoor sensor and replace it if necessary.	

Display message	**R e t u r n t e m p h i g h**
	9 9 9 , 5 h r s
Reason	Return temperature has exceeded the blocking temperature, but it has not exceeded the lock-out value.
Cause: Systems that pre-heats the boiler return temperature too much/high.	
Corrective action:	
Reduce pre-heat temperature of external heat source.	
Cause:	
The need for heat in the system suddenly drops causing hot return water to the boiler.	
Corrective action:	
Dampen external heating system control to prevent sudden boiler temperature rise.	

Display message	**T 2 - T 1 h i g h**
	9 9 9 , 5 h r s
Reason	Difference between T2 and T1 has exceeded the blocking value which has been set in the parameters. (return temp higher than flow)
Cause: The water flow through the unit is too low.	
Corrective action:	
Check functioning of the pump. Check/open all valves that might restrict the water flow through the unit Check for an external system pump that influences flow through the unit Check if the system resistance exceeds the spare capacity of the unit pump. Make sure that the heat exchanger is clean. Heat exchanger fouling (partly blockage) will increase the resistance causing the water flow to drop.	

Display message	**W a t e r p r e s s u r e f a u l t**
	9 9 9 , 5 h r s
Reason	Water pressure is too low or high.
Cause:	
The water pressure in the system is too high.	
Corrective action:	
Check if the system pressure is too high after (re)filling. Make sure that there is a pressure relief valve and expansion vessel installed in the system, according to the applicable standards. Check if there is an open connection between the unit and the relief valve plus expansion vessel. Be aware that if the unit is installed in the basement of a tall building, only the static pressure of the water column above the units can raise above the maximum allowable limits. Make sure that this is not the case.	
Cause:	
The water pressure in the system is too low.	
Corrective action:	
Check if there is no leakage in the system that causes the pressure to drop. Fix any leakage and fill the system. Check if there is an external system pump that sucks water through the boiler, causing an under pressure. (bad installation design).	

16.3. Maintenance reminder function

The display shows alternating the base screen and this message, while backlight is blinking.
The boiler is operating but will count the exceeding hours.
A parameter must be changed, after service, to remove this message.

Display message	**N**	**e**	**e**	**d**	**s**		**M**	**a**	**i**	**n**	**t**	**e**	**n**	**a**	**n**			**0**	**.**	**0**
	I	**g**	**n**	**i**	**t**	**i**	**o**	**n**		**c**	**y**	**c**	**l**	**e**	**s**		**h**	**r**	**s**	
Reason	Maintenance option of total number of ignition cycles has been reached.																			

Display message	**N**	**e**	**e**	**d**	**s**		**M**	**a**	**i**	**n**	**t**	**e**	**n**	**a**	**n**			**0**	**.**	**0**
	D	**a**	**t**	**e**													**h**	**r**	**s**	
Reason	Maintenance option of the date has been reached.																			

Display message	**N**	**e**	**e**	**d**	**s**		**M**	**a**	**i**	**n**	**t**	**e**	**n**	**a**	**n**			**0**	**.**	**0**
	B	**u**	**r**	**n**	**i**	**n**	**g**		**h**	**o**	**u**	**r**	**s**				**h**	**r**	**s**	
Reason	Maintenance option of total amount of burning hours has been reached.																			

Display message	**N**	**e**	**e**	**d**	**s**		**M**	**a**	**i**	**n**	**t**	**e**	**n**	**a**	**n**			**0**	**.**	**0**
	A	**l**	**l**														**h**	**r**	**s**	
Reason	One of all selected maintenance options has been reached.																			

This message function is standard not activated, but can be activated/set by a trained engineer. This function does not overrule the need for annual maintenance. The end user is always responsible for arranging annual maintenance.

17. MAINTENANCE

17.1. General

For a good, safe and long-time operation of the boiler it is advised to carry out maintenance and service on the boiler.

Maintenance and inspection of the boiler should be carried out at the following occasions:
- **When a number of similar error codes and/or lock-outs occur.**
- **At least every twelve months, maintenance must be done to ensure safe and efficient operation.**
- **An overhaul of all serviceable gaskets needs to be completed once every 3 years – a S-CB+ service kit is available as a spare.**

Damage caused by lack of maintenance will not be covered under warranty.

MAINTENANCE REMINDER FUNCTION.
← *See previous page.*
BE AWARE: This function is standard turned off. We offer this programmable function to the installer to use as a reminder. Because it concerns a free programmable function the use of it cannot be used as an argument in warranty cases. Our units must be maintained every twelve months whatever the settings/working of this function. **It is and remains the responsibly of the end user to have the unit maintained every twelve months.**

For more information about the maintenance mode see chapter 10.14. : ‘Setting the maintenance specifications.

Service intervals
The normal service frequency for the boiler is once a year. Every year the boiler should be cleaned and checked, according to the maintenance procedures. If there is doubt whether the boiler is operating with the correct water and/or combustion air quality, it is advised that a first check is already executed after six months. This check serves to determine the frequency of the future services. The maximum interval between two services is a year.

⚠ INSPECTION AND MAINTENANCE MUST BE EXECUTED FOR A SAFE AND EFFICIENT OPERATION OF THE BOILER.

17.2. Annual inspection & maintenance

Inspection, maintenance and the replacement of boiler parts should only be done by a skilled service engineer. Apart from the maintenance proceedings it is advised to have a log chart for every boiler that describes the following aspects:
- Serial number
- Date and time of maintenance
- Name of maintenance engineer
- Which parts were exchanged during maintenance
- Which settings (software) were changed during maintenance
- Special remarks / findings
- Future aspects that need extra attention
- Additional aspects: measurement reports, complaints by the (end)-user, lock-out codes, etc.

During maintenance, the following parts and aspects of the boiler should be checked and inspected.
NOTICE: Before starting to work on the boiler:
- Switch off the electrical power to the boiler (service switch and/or unplug boiler)
- Close the gas valve to block gas supply to the boiler

Customer comments
Comments and remarks from the customer should be analysed and used to find possible causes for any occurring problems and complaints.

Service history
The operational and fault history (total amount and since the last service) of the boiler can be retrieved with the help of a computer, correct software and an interface cable. This information can be used to specify the maintenance and service proceedings in relation to the boiler (parts).

Water leakage
The water pressure of the heating installation should be more than 1.0 bar and at a maximum of 4.0 bar. When the water pressure drops below the minimum occasionally, there might be a water leak. Check the boiler and the complete heating installation for any water leakages and have these repaired.

Flue gas & air supply
The flue gas and air supply pipes must be checked for gas tightness. Also check if the mounting of these pipes is correct, safe and not damaged. Check the top panel of the boiler housing for signs of water leakage and traces of water coming from the air supply pipe, the air vent or any condensate coming from the flue gas pipes.

The flue gas outlet has been provided with a flexible adaptive restriction, which should be checked annually. If necessary, remove contamination or other possible failure causes. If there is any doubt of the good state or correct functioning of the adaptive restriction, it must be replaced.

Gas supply & safeties
The gas pipes must be checked for gas tightness. Also check if the mounting of these pipes is correct. safe and not damaged. Any built-in safeties should be checked for a correct functioning.

Remove complete burner unit
The complete burner unit consists of the fan, the burner plate and the internal burner.
To remove this part, loosen and remove the six nuts on the burner door and disconnect the ignition cable and ground wire connector. When the inlet venturi and the cables connected to the fan are disconnected, one can pull the burner door assembly outwards about 5-6 cm.
While keeping the burner in the heat exchanger one can turn the whole unit clockwise until the black fan motor cover touches the foam on the inside of the left side panel.
Gently press the black fan cover in the foam, creating just enough clearance for the bottom of the fan housing to slide just over the connection terminals.
If this clearance is ensured, one can pull the whole burner door assembly outwards and thereby remove it from the boiler.

NOTICE: To make removal more easy, one can loosen and remove the three mounting screws in the bottom half of the left panel. Two screws are situated on the bottom of the boiler, on the ridge of the left side panel, and one is situated in the display console in front, at the front ridge of the left side panel. After this one can bend the bottom of the left side panel outwards while the panel is still fixed with the two-side panel mounting screws on top. This will create more clearance for the removal of the burner door assembly.

NOTICE: When handling the burner door assembly during removal, mounting and maintenance, be sure that the insulation of the burner door is not damaged.

Burner
Check the burner surface to see if it has damages. signs of rust and/or is cracked. When the burner surface is damaged, the burner must be replaced. The burner can be cleaned by using a soft (non-metallic) brush. The dust can be removed with a vacuum cleaner or pressurized air.

Ignition / ionisation electrode
When the complete burner is removed, it is very easy to check the ignition electrode. First check if the distances between the electrodes and between the electrode and the burner are according to the graph below. When these are not correct, try to bend the electrodes in the right position. Notice: the electrodes undergo high temperatures, therefore the electrodes become hard and are difficult to bend. While bending used electrodes, they might break or burst. Check the electrode, after bending, for any tear/crack and signs of rust. When they are burst/cracked or rusty, replace the electrode. Also replace the electrode when there is a crack in the ceramic insulation of the electrode. When the electrode is going to be replaced also the gasket should be renewed.

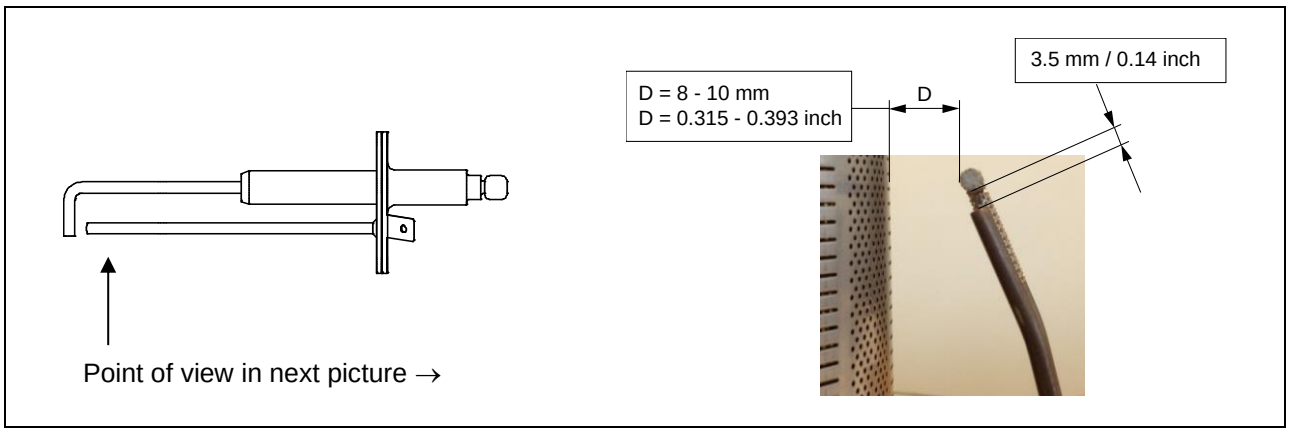

Burner door gaskets
When these gaskets have changed colours at some parts, the rubber has cured and/or has damages, these gaskets must be replaced. Notice: only use the gaskets that are supplied by the boiler manufacturer.

Fan
When the fan blades are polluted and dirty, carefully clean the blades with a soft brush. Notice: do not use too much force on the blades or else the fan might be out of balance and run irregularly, causing noises and fan failures. Check the fan also for any water damages. In doubt always replace the fan of the boiler.

Insulation
The insulation of the heat exchanger (located on the rear wall inside the heat exchanger and burner door) must be inspected. If this insulation disk shows any signs of (water) damage or degradation it should be exchanged. Also check if there are any indications in the burner room of a high condensate level (caused by a blocked siphon) that might have wetted the rear wall insulation. When this has happened the rear wall insulation should also be replaced.
Only use the insulation disk that is supplied by the boiler manufacturer.
The same procedure must be applied on the insulation and gaskets fitted on the burner door.

Siphon
The siphon must be checked at least once a year. Disassemble the siphon and clean every part of it. Check the functioning of the siphon by filling it with water. Then blow into the top condensate inlet and gently increase the pressure. At some point water starts coming out of the siphon outlet. During this the float/ball should gradually drop into its seat. By doing this, the ball then should close the outlet (almost) completely.

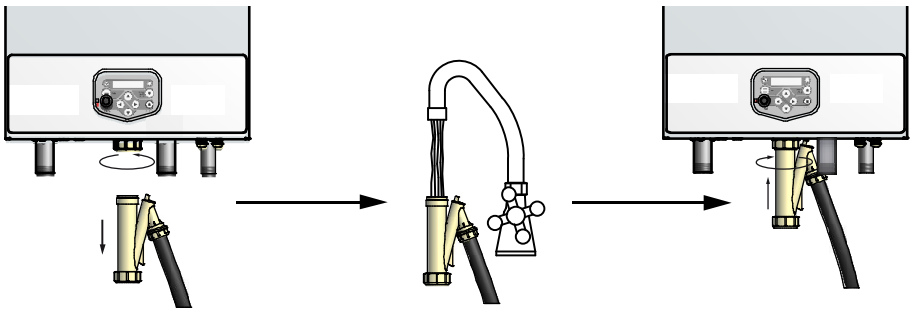

Heat exchanger and burner room
After the removal of the complete burner unit check if there is any debris and dirt in the heat exchanger. The coils of the heat exchanger can be cleaned by using a non-metallic brush. After this the dirt and dust can be removed with a vacuum cleaner and by flushing the burner room with water. Don't forget afterwards to clean the siphon once again.

⚠ Cleaning the burner room with acid or alkali products is prohibited.

Gas/air ratio
With every service check and/or maintenance of the boiler always check the gas/air ratio by measuring the CO_2 percentage (flue gas) at the maximum and minimum load of the boiler. If necessary, adjust these values. See for information chapter 15 “Adjusting and setting the burner”.

Pump
Check the electrical parts and the motor of the pump for a correct functioning. The pump must generate a sufficient water flow over the (heat exchanger of) the boiler. When the pump produces noise, is operational for more than five years or has signs of water leakage it is recommended to replace the pump as a precaution.

When defects and abnormalities are found by the service engineer during service and maintenance and these are not repairable, this information should be reported to the owner/end-user of the installation. Also, the owner/end-user should be advised how to fix these defects and these defects should be reported in the service report / log file of the boiler.

During service and maintenance, the gas, supply air, flue gas and condensate connection are disconnected, checked and replaced. Make sure that all these components are mounted correctly before commissioning the boiler again.

Reassembling the burner door correctly onto the heat exchanger:

IMPORTANT:
Before mounting the burner door, make sure that its gaskets and insulation are in excellent shape.
If any signs of damage or ageing are present, these parts must be replaced.

The burner door unit must be reassembled to the heat exchanger just in the reverse way of its disassembling, as described earlier in this section, on page 108.
Carry out the final mounting of the burner door by following the next steps:

- Place the burner door with its holes over the six threaded studs.
  Careful! When handling too rough or misplacing the holes over the threaded studs, the burner door insulation and/or gaskets can be damaged.
  Assure yourself that the door is well positioned with respect to the threaded studs, before pushing it onto the exchanger.
- Now keep the burner door firmly in place by pushing the gas/air nose with one hand at the middle at point **A**.
- Then turn-tighten the flange nuts with the other hand as far as possible onto the threaded studs.

Now the burner door is in place and the nuts can be tightened with a torque key.
- Tighten the nuts in the order given in the picture below
- The specified torque value for tightening the burner door flange nuts is **8 Nm**

- tighten in given order

- torque value = 8 Nm

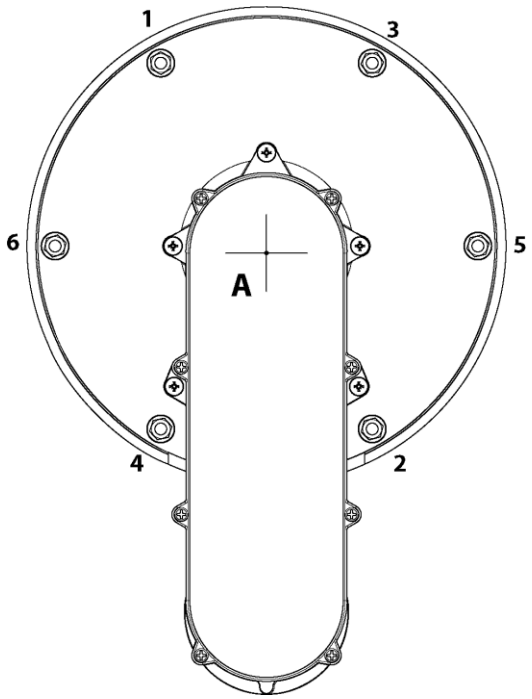

18. USER INSTRUCTIONS

After installing and commissioning the boiler, demonstrate the operation of the entire central heating system to the end-user. The user should be made familiar with all safety precautions of the boiler and the installation. The user should be instructed that service and maintenance of the boiler is required every 12 months. Regular service and maintenance is essential for a safe and proper operation of the boiler. Hand over the documents that are supplied with the boiler.

INSTALLATION EXAMPLES

The following schematics present several ways of mounting the heating installation.

All schematics are purely functional. Safety components must be added conform all applicable standards and regulations.

System type 1

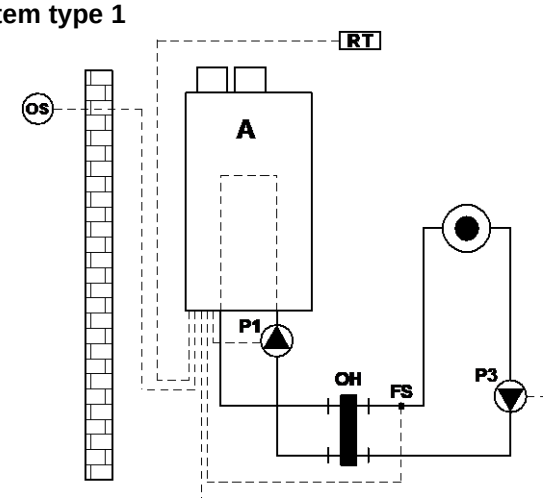

System 6	Name	Wire terminal	Part no.
P1	Boiler pump	30-31-32	E400157
P3	Optional heating pump	23-24-25	
RT	Modulating room unit with timer	11-12	S04.016.355
FS	Flow temperature sensor	3-4	E04.016.304
OH	Low loss header		
OS	Outdoor temperature sensor	1-2	E04.016.585
No parameter change required			

A	**= boiler**
●	**= heating zone**

System type 2

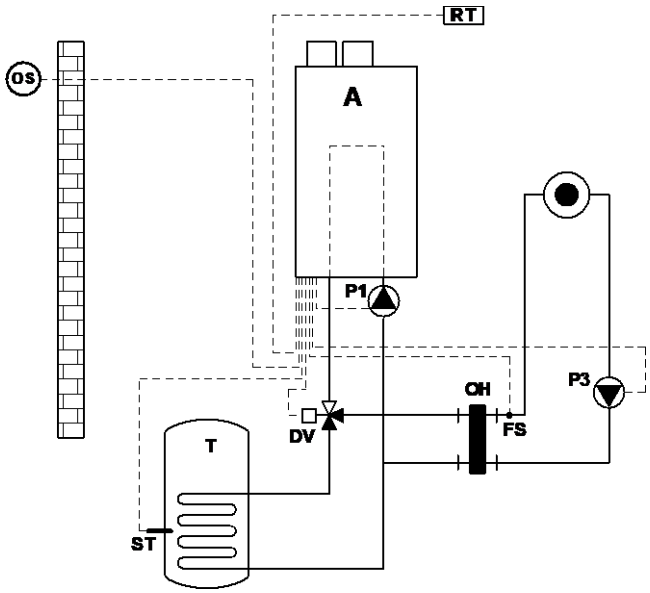

System 7	Name	Wire terminal	Part no
P1	Boiler pump	30-31-32	E400157
P3	Optional heating pump	23-24-25	
RT	Modulating room unit with timer	11-12	S04.016.355
T	Calorifier tank		
ST	Calorifier thermostat or tank sensor	5-6	E400277
OH	Low Loss Header		
FS	Flow temperature sensor	3-4	E04.016.304
DV	Diverter valve (3-way-valve)	26-27-28-29	
OS	Outdoor temperature sensor	1-2	E04.016.585
Parameter change required			

A	**= boiler**
●	**= heating zone**

System type 3

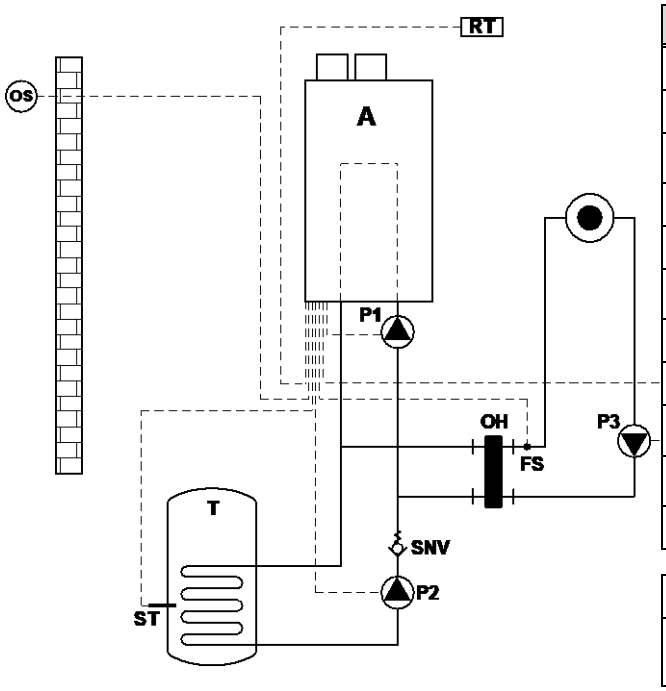

System 8	Name	Wire terminal	Part no
P1	Boiler pump	30-31-32	E400157
P3	Optional heating pump	23-24-25	
RT	Modulating room unit with timer	11-12	S04.016.355
T	Calorifier		
P2	DHW primary pump	27-28-29	
ST	Calorifier thermostat or tank sensor	5-6	E400277
OH	Low loss header		
FS	Flow temperature sensor	3-4	E04.016.304
SNV	Non-return valve (low resistance type)		
OS	Outdoor temperature sensor	1-2	E04.016.585
Parameter change required			

A	**= boiler**
●	**= heating zone**

System type 4

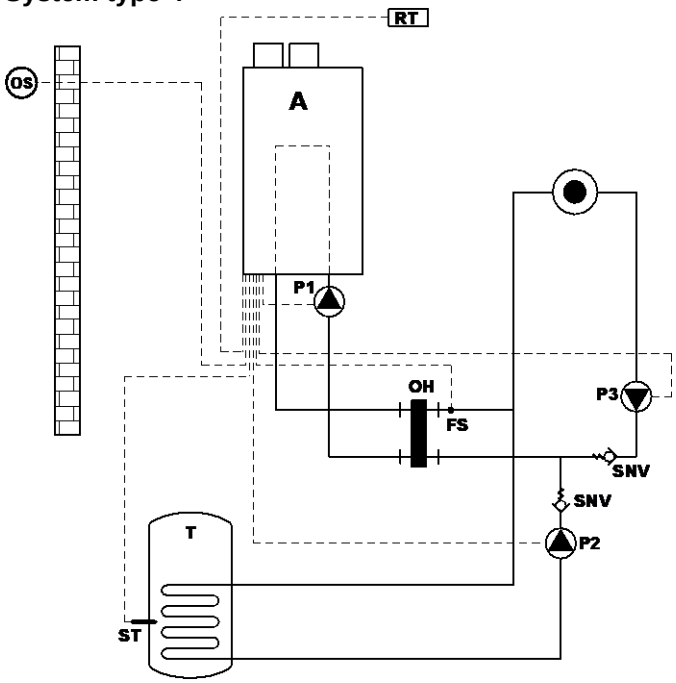

System 9	Name	Wire terminal	Part no
P1	Boiler pump	30-31-32	E400157
P3	Optional heating pump	23-24-25	
RT	Modulating room unit with timer	11-12	S04.016.355
P2	DHW primary pump	27-28-29	
T	Calorifier tank		
ST	Calorifier thermostat or tank sensor	5-6	E400277
OH	Low loss header		
FS	Flow temperature sensor	3-4	E04.016.304
SNV	Non-return valve (low resistance type)		
OS	Outdoor temperature sensor	1-2	E04.016.585
Parameter change required.			

A	**= boiler**
●	**= heating zone**

System type 5

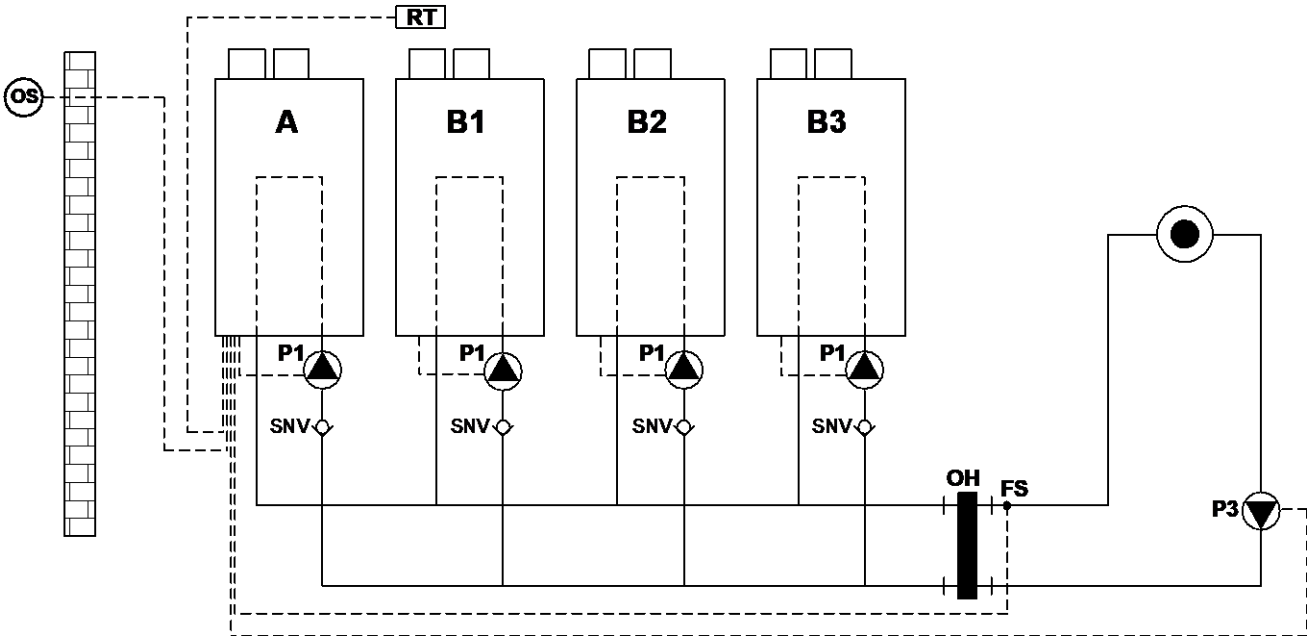

System 10	Name	Wire terminal	Part no
P1	Boiler pump	30-31-32	E400157
P3	Optional heating pump	23-24-25	
RT	Modulating room unit with timer	11-12	S04.016.355
SNV	Non-return valve (low resistance type)		
OH	Low loss header		
FS	Flow temperature sensor	3-4	E04.016.304
OS	Outdoor temperature sensor	1-2	E04.016.585
Parameter change required			

A **B1** **B2** **B3**	**= boiler master** **= boiler slave1** **= boiler slave2** **= boiler slave3**
●	**= heating zone**

System type 6

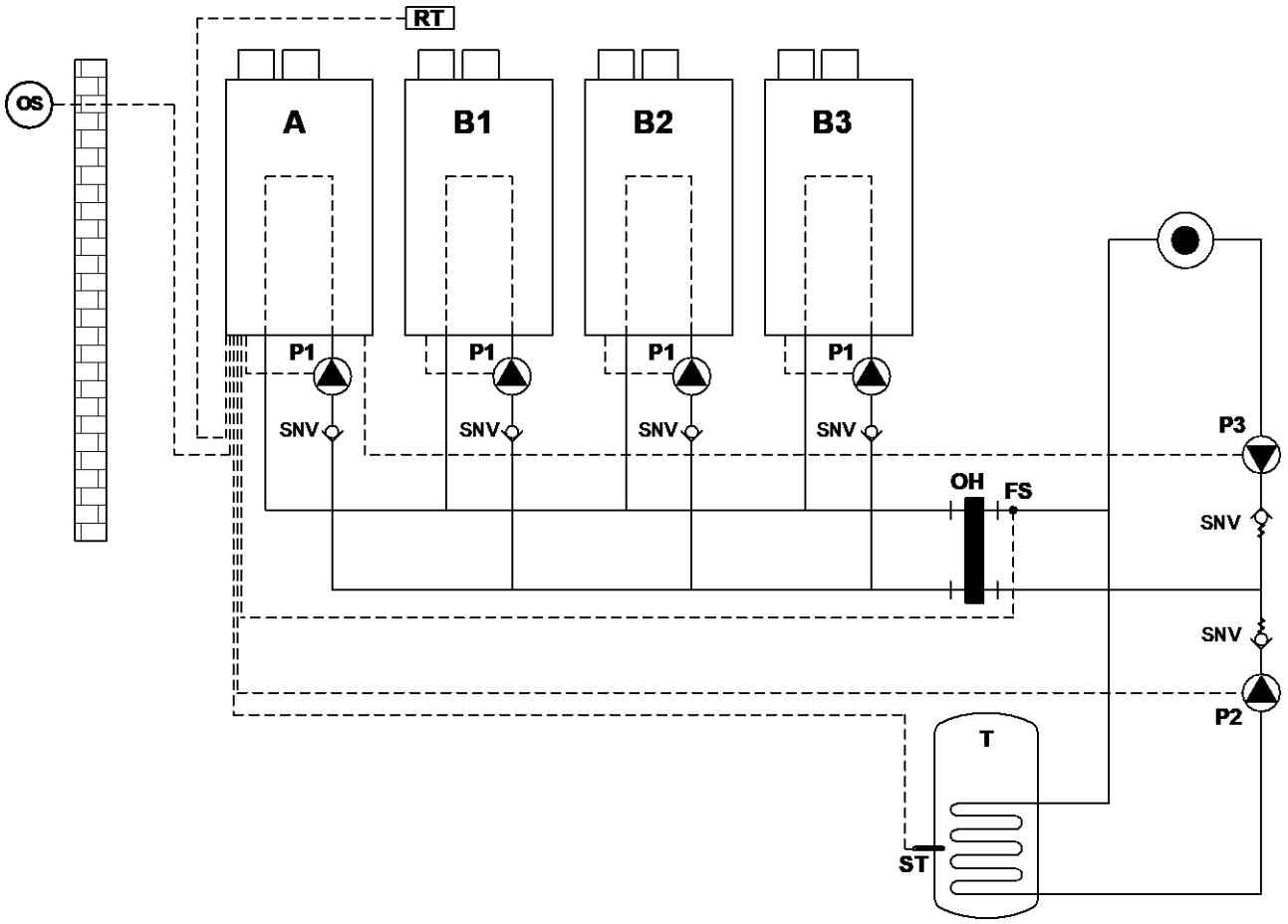

System 11	Name	Wire terminal	Part no
P1	Boiler pump	30-31-32	E400157
P3	Optional heating pump	23-24-25	
RT	Modulating room unit with timer	11-12	S04.016.355
SNV	Non-return valve (low resistance type)		
P2	DHW primary pump	27-28-29	
T	Calorifier tank		
ST	Calorifier thermostat or sensor	5-6	E400277
OH	Low loss header		
FS	Flow temperature sensor	3-4	E04.016.304
OS	Outdoor temperature sensor	1-2	E04.016.585
Parameter change required.			

A **B1** **B2** **B3**	**= boiler master** **= boiler slave1** **= boiler slave2** **= boiler slave3**
●	**= heating zone**

19. Strebel S-CB PX 120

19.1. Spare parts exploded view and part numbers

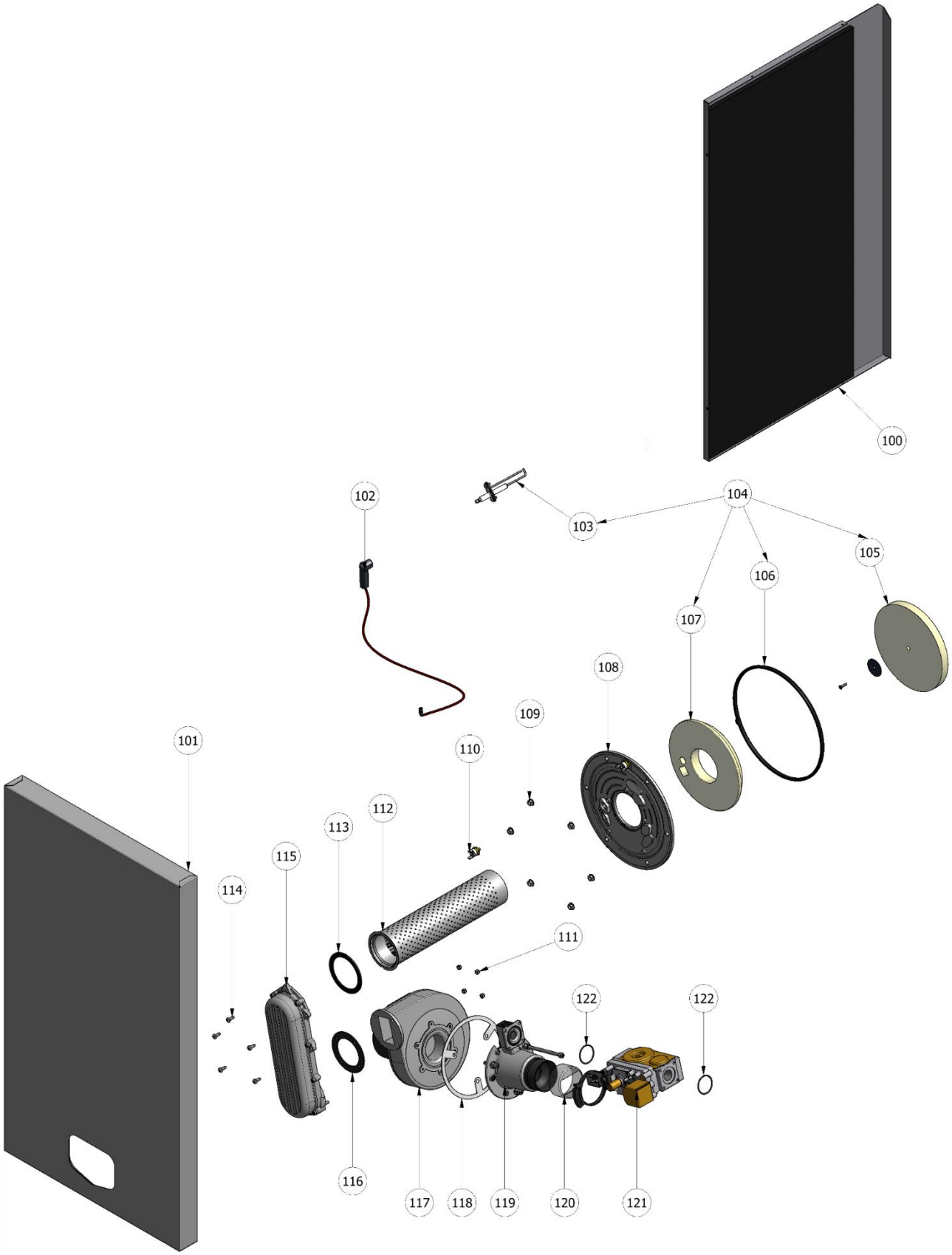

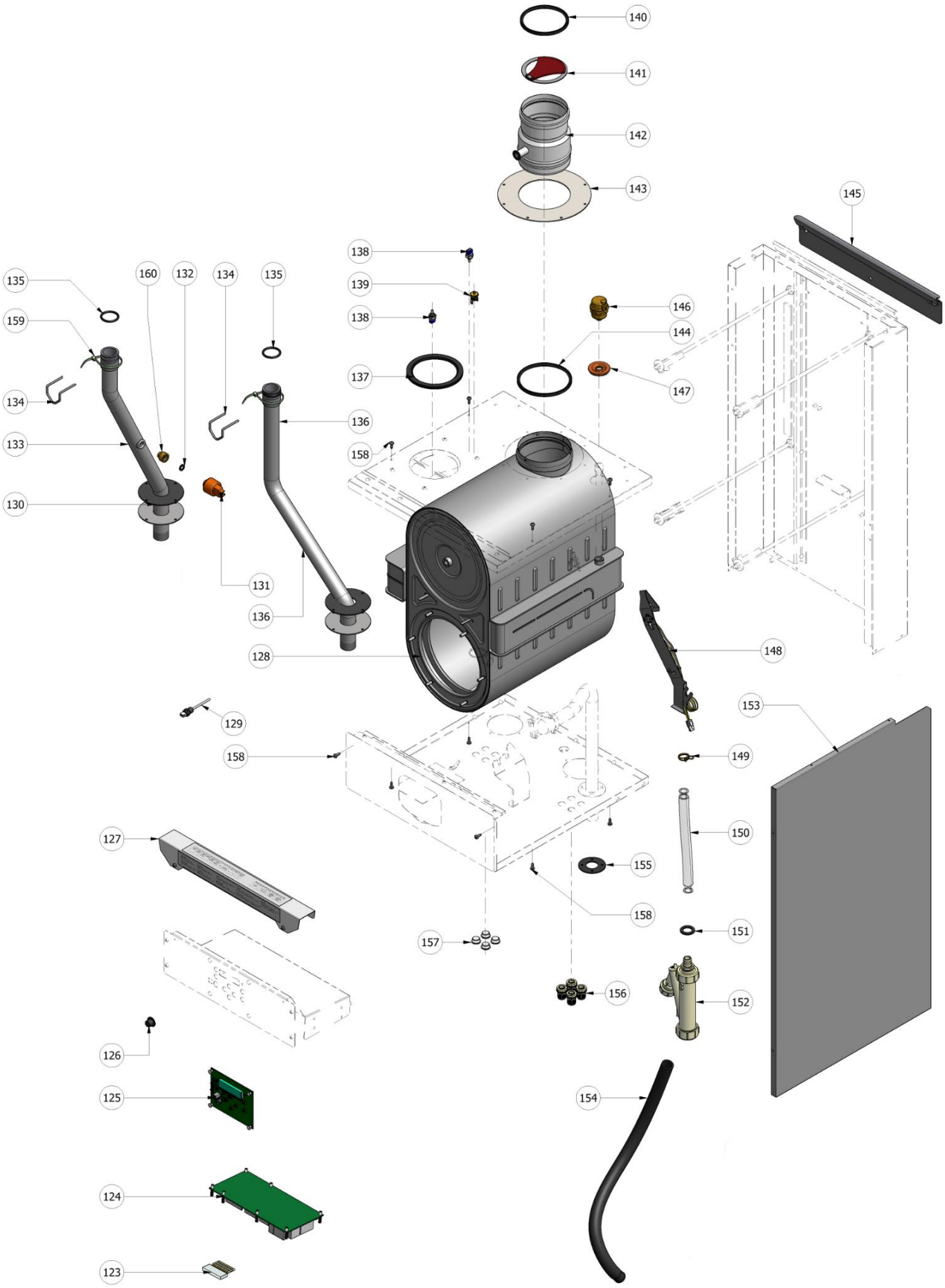
140
141
142
143
145
138
139
138
146
144
147
137
135
160
132
134
135
159
134
133
130
136
158
131
136
128
148
129
153
158
149
150
127
155
158
151
157
156
152
126
125
154
124
123

Draw No	Qty	Part Number	Description
100	1	E400148	Side panel left S-CB PX 120
101	1	E400147	Front panel S-CB PX 120 Serial number dependent
102	1	E04.016.583	Ignition cable 35-180 BIC
103	1	S04.000.372	Electrode set c/w gasket & screws.
104	1	S04.000.243	Maintenance set 16 mm insulation (A/CD/C)
105	1	E400120	Insulation burner room 16 mm
106	1	S07.004.035	Gasket burner door - heat exchanger
107	1	E07.010.093	Insulation burner door
108	1	E400245	Equipped burner door
109	1	E400254	Set nuts with flange M6 (10 pcs)
110	1	E400141	Burner door thermostat 260°C M5
111	4	E06.010.037	Nut M5 self-locking DIN982
112	1	E04.012.027	Burner 10+6
113	1	E07.001.029	Gasket Burner & gas/air inlet pipe
114	1	E400255	Set round head screw M5x14 self-thread-cutting (5 pcs)
115	1	E400237	Gas-air mixing pipe
116	1	E07.001.049	Gasket gas/air inlet pipe & fan 58mm
117	1	S04.000.069	Fan RG 148
118	1	E400202	Distance ring venturi
119	1	E400243	Venturi Assy S-CB PX 120
120	1	E400131	Propane/Butane air restrictor kit
121	1	E400244	Gas valve (B+J) S-CB PX 120
122	2	E400266	O-ring 33x2 NBR
123	1	E400246	Fuse 5 AT (10 pcs)
124	1	S04.000.229	Boiler control (PCB) SB / Serial number dependent
125	1	S04.000.224	Display unit BIC incl. cable
126	1	E05.001.062	Rubber plug ø15
127	1	S01.000…….	Protection plate boiler control SB / Serial number dependent
128	1	S04.000.280	Heat exchanger S-CB PX 120 (10+6)
129	1	E400230	NTC flue gas sensor ¼"
130	2	E400211	Gasket pipe bottom plate S-CB PX 120
131	1	S04.000.253	Pressure transmitter 4 bar (CH-units only)
132	1	E400207	Gasket pressure transmitter (CH-units only)
133	1	E400233	Flow pipe S-CB PX 120
134	2	E09.002.022	Spring coupling
135	2	E07.002.033	O-ring ø33,50 x 4,00
136	1	E400234	Return pipe S-CB PX 120
137	1	E400199	Lip seal Ø 100 mm. air inlet
138	2	E400198	NTC sensor 1/8"
139	1	E04.016.274	High limit thermostat 100°C (212°F)
140	1	E400110	Seal ring 100 mm
141	1	E400253	Flue gas check valve assy ø100mm
142	1	E400228	Adaptor Ø100 mm with check valve
143	1	E07.001.081	Silicon gasket 100-120/Evo399
144	1	E400268	Seal ring 4"
145	1	S01.001.014	Wall bracket
146	1	E04.015.008	Automatic air vent 1/4" BSP
147	1	E04.010.033	Tube gland ø38 mm
148	1	E400285	Rear wall thermostat 100-180 (16 mm rear wall)
149	1	E400194	Hose clamp DW-13
150	1	E400192	PVC hose Ø 21 x 15 L=340 mm.
151	1	E400210	Gasket siphon / bottom plate
152	1	E400200	Condensate drain assembly
153	1	E400227	Side panel right S-CB PX 120
154	1	E04.007.038	Condensate drain hose
155	1	E400123	Gasket bottom plate gas pipe
156	1	E05.000.064	PG-9 swivel + cable gland 8mm
157	1	E05.001.227	Parallel plug 16,5 mm
158	8	E06.004.002	4,8x13 DIN7981F screw
159	2	E06.019.010	Trap heat stabilized
160	1	E04.002.092	Brass piece 3/8"x1/4"

(BLANK PAGE)

Strebel Ltd
Unit 10, Invincible Industrial Estate,
Invincible Road, Farnborough,
Hampshire, GU14 7QU.

T 01276 685422
F 01276 685405
E info@strebel.co.uk
I www.strebel.co.uk

CE

STREBEL
HEATING TECHNOLOGY

STREBEL LTD RESERVE THE RIGHT TO CHANGE ANY SPECIFICATIONS ON THIS BOILER RANGE WITHOUT NOTICE

Further information on our complete product range is available from our website.

CAST IRON – CONDENSING – STEEL SHELL – WATER HEATERS – RENEWABLES

FLUES – ACCESSORIES.