STREBEL
S-CB+ Cascade Kits

Models +60 - +80 - +100 - +120 – PX 120 - +150 - +180

Installation & Operating Manual

2x60 up to 12x180

Please read and understand before commencing installation and leave the manual with the customer for future reference.

STREBEL HEATING TECHNOLOGY

2017-05-01 v1

INDEX

1. INTRODUCTION 5

2. CASCADE SELECTION TABLE 6

3. MAIN DIMENSIONS 8

4. EXPLANATION OF PARTS AND GROUPS 10

5. FRAME GROUPS 11

6. MOUNTING THE BOILERS ON THE FRAME 13

7. MOUNTING THE CONNECTING SETS 14

8. MOUNTING THE HYDRAULIC GROUP 16

8.1 Hydraulic group for 2 boilers S-CB⁺ 60–120 and/or S-CB PX 120 17
8.2 Hydraulic groups for 3 and 4 boilers S-CB⁺ 60–120 and/or S-CB PX 120 18
8.3 Hydraulic groups for 2 and 3 boilers S-CB⁺ 150–180 19
8.4 Hydraulic group for 4 boilers S-CB⁺ 150–180 20
8.5 Hydraulic groups for 5 and 6 boilers S-CB⁺ 150–180 21

9. LOW VELOCITY HEADERS 22

10. FLUE GAS AND AIR SUPPLY 24

10.1 Individual or common flue systems 24
10.2 Individual flue systems 24
10.3 Common flue systems 24
10.4 Installation examples flue gas systems. 25

11. INSTALLATION 26

12. PARAMETERS 28

12.1 Parameter settings for cascaded boilers 28
12.2 Control panel / display unit 29
12.3 Setting the parameters using the control panel 30
12.4 Monitor screens 31

13. CASCADE CONTROL 32

13.1 Output control 32
13.2 Boiler sequence 32

14. OPTIONS 33

1. Introduction

Figure 1 - Typical cascade configuration (S-cb PX 120 Above).

This Cascade manual is intended for the S-CB⁺ and the S-CB PX 120 wall-hung high efficiency CH boilers by Strebel Ltd. These boilers are available, in order of ascending output, as S-CB⁺60, ⁺80, ⁺100, ⁺120, PX120, ⁺150 and ⁺180.

The S-CB 60⁺ - 120⁺ (Not including the PX models) can be combined in one cascade set, as can the S-cb⁺ 150-180 boilers, but the S-CB PX 120 models can only be combined with the PX 120 model.

Strebel Ltd can supply standard cascade systems with mounting frame, piping and low loss headers for up to four boilers in the 60-120 range, four boilers in the PX 120 range and even six in the 150-180 range. For cascades with more boilers, a dedicated system must be designed.

The Strebel S-CB⁺ boilers are standard equipped with an internal cascade manager for up to twelve boilers. No extra controllers are necessary, only connect a 2-wire cable between all boilers.

The low-loss header can be fitted on the right-hand side as well as on the left-hand side without making any alterations to the delivered parts. The gas connection can also be fitted on one of both sides, independently from the side chosen for the low loss header.

To commission the cascade installation, it is necessary to set a number of parameters on the boilers, see chapter 12.1.

2. Cascade Selection Table

When selecting a cascade set-up, follow the next steps:

1. First determine the total required power of the set.
2. Determine the best number of boilers required (q. in the table(quantity)).
3. Choose one of the combinations in the table below (even more combinations are available).
4. Determine the required space for the set in the main dimensions' tables and check this with the planned location.
5. Determine the required flue gas and air supply lines.
6. Choose all the required accessories in the Options-chapter.

Total Kw Input	2 Boilers				3 Boilers				4 Boilers			
	Model	q.	Model	q.	Model	q.	Model	q.	Model	q.	Model	q.
120	+60	2x										
140	+80	1x	+60	1x								
160	+80	2x										
180	+100	1x	+80	1x	+60	3x						
200	+100	2x			+80	1x	+60	2x				
220	+120	1x	+100	1x	+80	2x	+60	1x				
240	+120	2x			+80	3x			+60	4x		
260					+100	1x	+80	2x	+80	1x	+60	3x
280					+100	2x	+80	1x	+80	2x	+60	2x
300	+150	2x			+100	3x			+80	3x	+60	1x
320					+120	1x	+100	2x	+80	4x		
330	+180	1x	+150	1x								
340					+120	2x	+100	1x	+100	1x	+80	3x
360	+180	2x			+120	3x			+100	2	+80	2x
380									+100	3x	+80	1x
400									+100	4x		
420									+120	1x	+100	3x
440									+120	2x	+100	2x
450					+150	3x						
460									+120	3x	+100	1x
480					+180	1x	+150	2x	+120	4x		
510					+180	2x	+150	1x				
540					+180	3x						
600									+150	4x		
630									+180	1x	+150	3x
660									+180	2x	+150	2x
690									+180	3x	+150	1x
720									+180	4x		

***** Figures in this column are the gross calorific values in kW at 100% load

Table continues next page →

STREBEL HEATING TECHNOLOGY

→ Continuation from previous page

Total Kw Input	5 Boilers				6 Boilers			
	Model	q.	Model	q.	Model	q.	Model	q.
750	+150	5x						
780	+180	1x	+150	4x				
810	+180	2x	+150	3x				
840	+180	3x	+150	2x				
870	+180	4x	+150	1x				
900	+180	5x			+150	6x		
930					+180	1x	+150	5x
960					+180	2x	+150	4x
990					+180	3x	+150	3x
1020					+180	4x	+150	2x
1050					+180	5x	+150	1x
1080					+180	6x		

3. Main dimensions

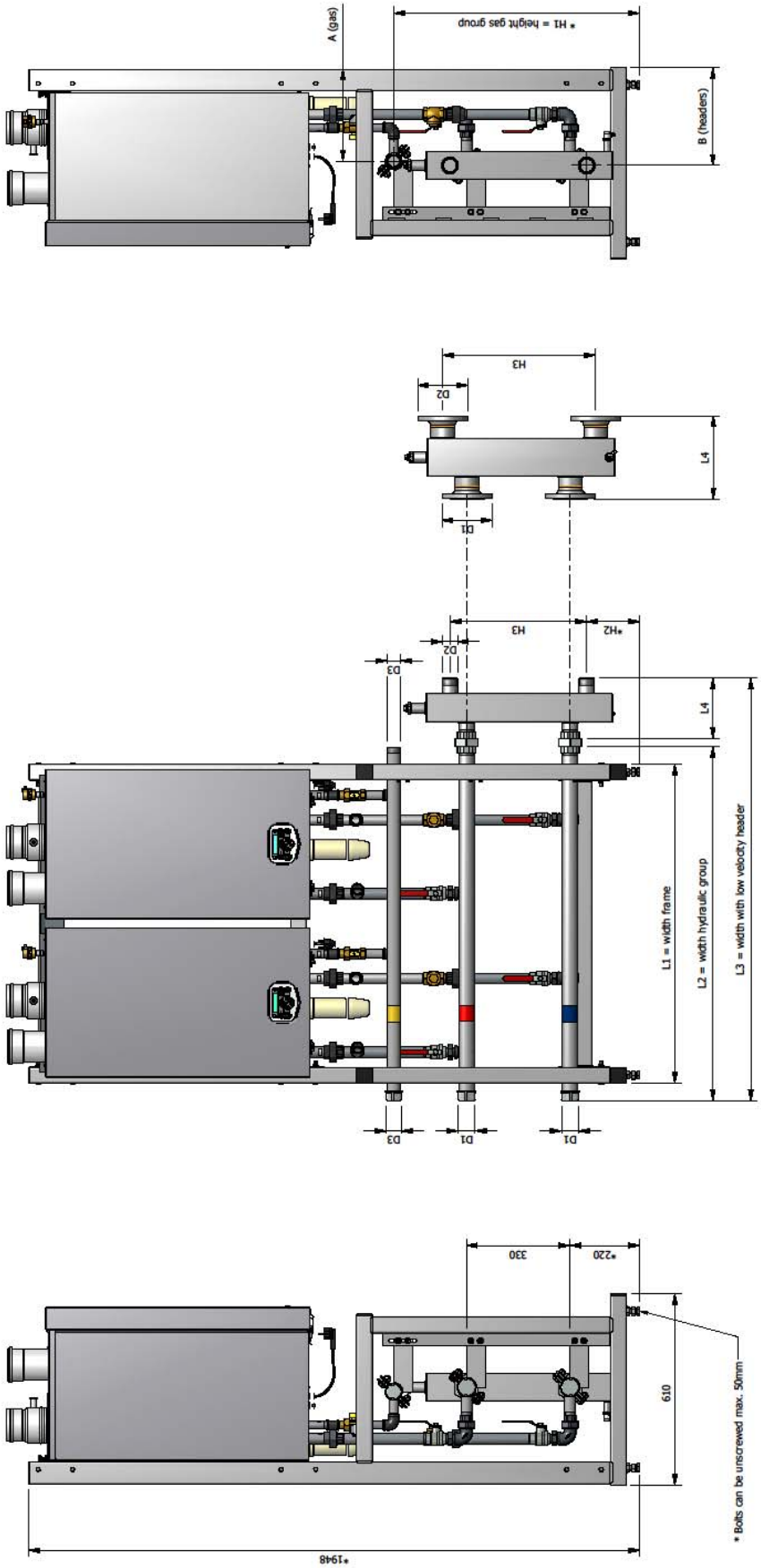

Figure 2. Cascade dimensions. The picture shows connecting sets for S-CB⁺ boilers – for the S-CB PX boilers the connecting sets are different.

S-CB Boilers +60 - +120	2 Boilers	3 Boilers	4 boilers
L1 (frame)	1015	1520	1980
L2 (standards)	1140	1630	2084
L3 (total)	1358	1914	2393
L4 (open header)	190	265	290
H1 (gas)	787	789	791
H2 (open header)	766	766	768
H3 (open header)	436	487	440
D1 (Header Connections Sizes)	RP 1½"	DN 65 PN6 (2½")	DN 80 PN6 (3")
D2 (Header Connections Sizes)	R 1½"	DN 65 PN6 (2½")	DN 80 PN6 (3")
D3 (gas)	R 1¼"	R 1½"	R 2"
A (gas)	271	283	283
B (headers)	283	283	283

S-CB Boilers +150 - +180	2 boilers	3 boilers	4 boilers	5 boilers	6 boilers
L1 (frame)	1015	1520	1980	2489	3045
L2 (standards)	1125	1630	2090	2607	3162
L3 (total)	1408	1940	2465	3516	4071
L4 (open header)	265	290	355	889	889
H1 (gas)	766	766	768	770	770
H2 (open header)	144	165	168	220	220
H3 (open header)	487	440	440	1000	1000
D1 (Header Connections Sizes)	DN 65 PN6 (2½")	DN 80 PN6 (3")	DN 100 PN6 (4")	DN 125 PN6 (5")	DN 125 PN6 (5")
D2 (Header Connections Sizes)	DN 65 PN6 (2½")	DN 80 PN6 (3")	DN 100 PN6 (4")	DN 125 PN6 (5")	DN 125 PN6 (5")
D3 (gas)	R 2"	R 2"	DN 80 (3")	DN 80 (3")	DN 80 (3")
A (gas)	338	338	338	335	335
B (headers)	283	283	283	294	294

Table 1. Main dimensions (mm and ").

4. Explanation of parts and groups

Each cascade set exists of the following parts and groups:

1. The number of S-CB⁺ type boilers as selected in chapter 2.
2. The frame group (with locking plates) as determined by the number of boilers.
3. Connecting groups to connect the boilers to the hydraulic groups (one group for each boiler, each group existing of 1 gas, 1 flow and 1 return connecting set).
4. Hydraulic group, existing of 1 gas, 1 flow and 1 return header with all fixing and connecting parts.
5. Low-loss header to connect hydraulic group to your heating installation.

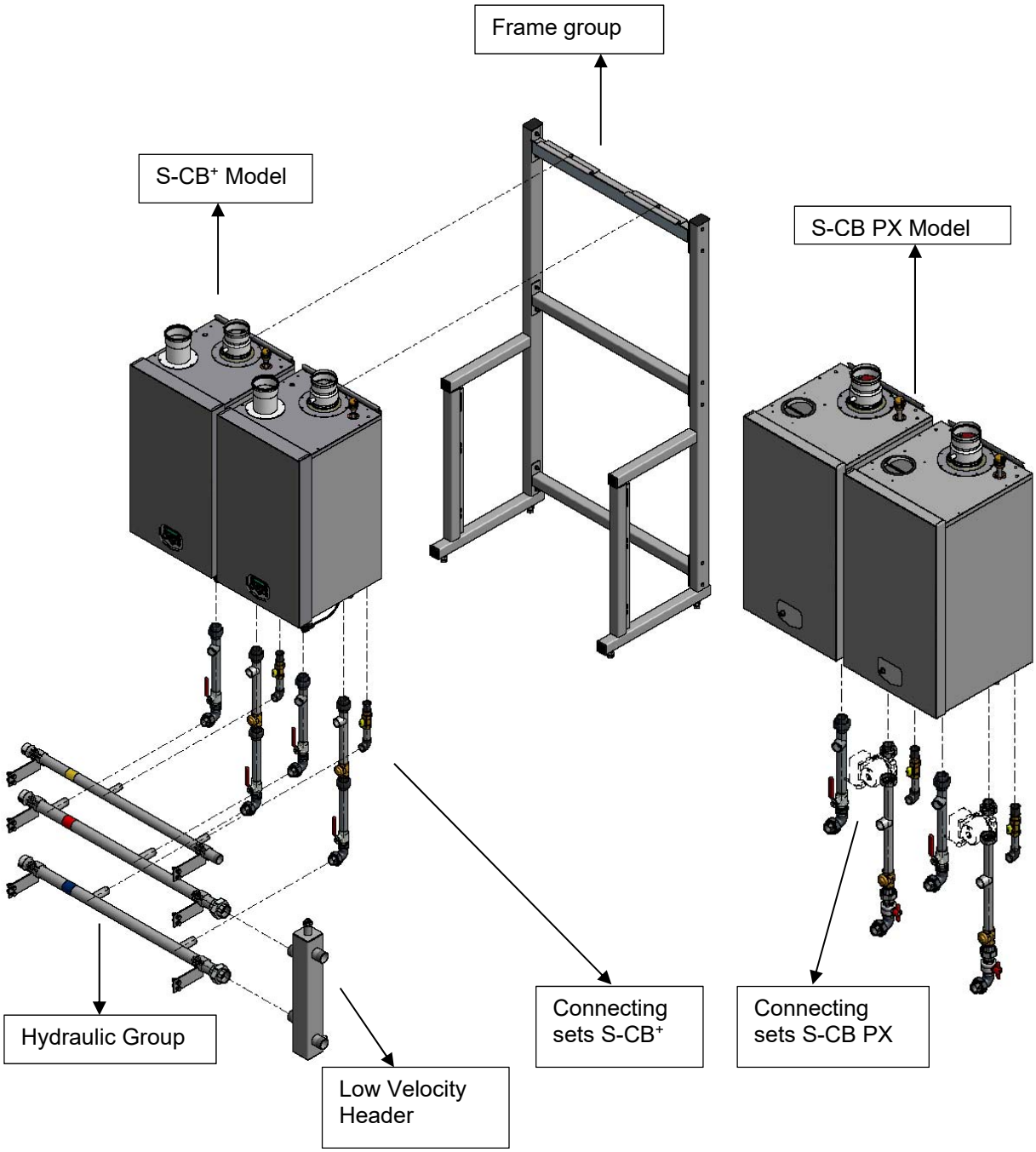

Figure 3. Cascade parts and groups. For the S-CB PX boilers, the return connecting sets are different from the S-CB⁺.

5. Frame groups

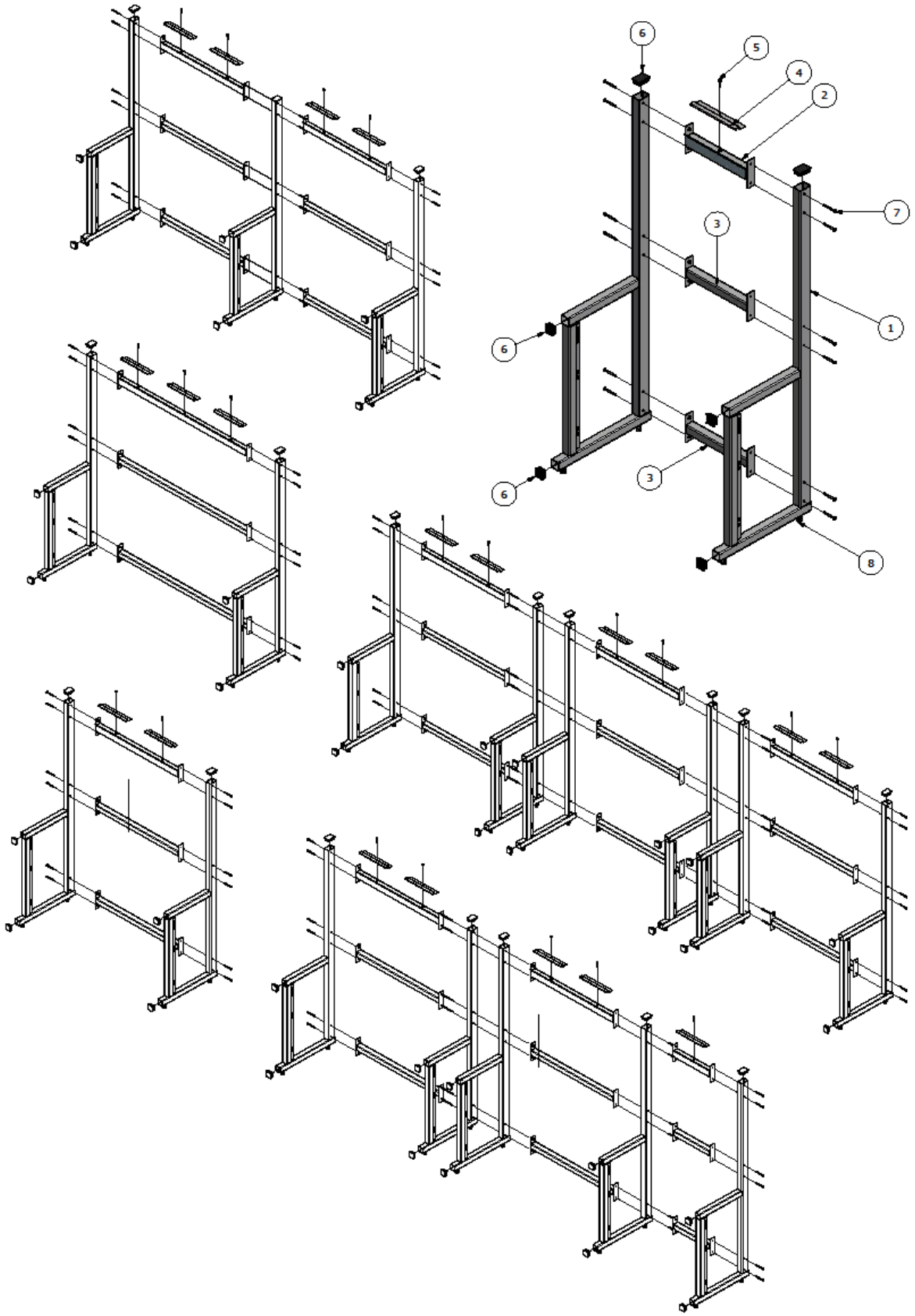

Figure 4. Cascade frame groups for 1, 2, 3, 4, 5 and 6 boilers.

		E00.000.158		E00.000.159		E00.000.160	
		Frame 1 Boiler		Frame 2 Boilers		Frame 3 Boilers	
Pos	***Description***	***part.no.***	***q***	***part.no.***	***q***	***part.no.***	***q***
1	standard	E02.040.004	2	E02.040.004	2	E02.040.004	2
2	upper beam	E02.040.005	1				
	upper beam			E02.040.006	1		
	upper beam					E02.040.007	1
3	mid/lower beam	E02.040.008	2				
	mid/lower beam			E02.040.009	2		
	mid/lower beam					E02.040.010	2
4	locking plate	E01.004.126	1	E01.004.126	2	E01.004.126	3
5	lock bolt M8 x 35	E06.000.023	1	E06.000.023	2	E06.000.023	3
6	seal plug 70mm x 50mm	E05.001.285	2	E05.001.285	2	E05.001.285	2
	seal plug 50mm x 50mm	E05.001.101	4	E05.001.101	4	E05.001.101	4
7	bolt M8 x 70	M8 x 70	12	M8 x 70	12	M8 x 70	12
	bolt M8 x 120						
	nut M8	M8	12	M8	12	M8	12
	washer M8	M8	13	M8	14	M8	15
8	adjusting bolt standard M16 x 80	M16 x 80	4	M16 x 80	4	M16 x 80	4

		E00.000.161		E00.000.207		E00.000.206	
		Frame 4 Boilers		Frame 5 Boilers		Frame 6 Boilers	
Pos	***Description***	***part.no.***	***q***	***part.no.***	***q***	***part.no.***	***q***
1	standard	E02.040.004	3	E02.040.004	5	E02.040.004	6
2	upper beam			E02.040.005	1		
	upper beam	E02.040.006	2	E02.040.006	2	E02.040.006	3
	upper beam						
3	mid/lower beam			E02.040.008	2		
	mid/lower beam	E02.040.009	4	E02.040.009	4	E02.040.009	6
	mid/lower beam						
4	locking plate	E01.004.126	4	E01.004.126	5	E01.004.126	6
5	lock bolt M8 x 35	E06.000.023	4	E06.000.023	5	E06.000.023	6
6	seal plug 70mm x 50mm	E05.001.285	3	E05.001.285	5	E05.001.285	6
	seal plug 50mm x 50mm	E05.001.101	6	E05.001.101	10	E05.001.101	12
7	bolt M8 x 70	M8 x 70	18	M8 x 70	18	M8 x 70	12
	bolt M8 x 120			M8 x 120	6	M8 x 120	12
	nut M8	M8	18	M8	24	M8	24
	washer M8	M8	22	M8	29	M8	30
8	adjusting bolt standard M16 x 80	M16 x 80	6	M16 x 80	10	M16 x 80	12

Table 2. Frame group parts.

STREBEL HEATING TECHNOLOGY

6. Mounting the boilers on the frame

All lines/piping must be mounted free of tension. The weight of all the components should be supported separately from the boiler so there is no force on the connections. This might influence the mounting position of the boiler.

Before mounting the boiler on the frame, ensure that the frame is level in both directions. If necessary adjust with the adjusting bolts on the lower side of the frame (see drawing).

After mounting the boiler on the frame, ensure that the boiler is level. If necessary adjust with the adjusting bolts on the lower rear side of the back panel. (see drawing).
When the adjusting bolts aren't sufficient, one needs to fill behind the bolts to get the boiler level. The levelling margin is between boiler hanging level, and hanging backwards a little.

The boiler should **not lean forward** in the mounted position.

Lock the suspension bracket with the locking strip to prevent the boiler from falling off the bracket (see drawing).

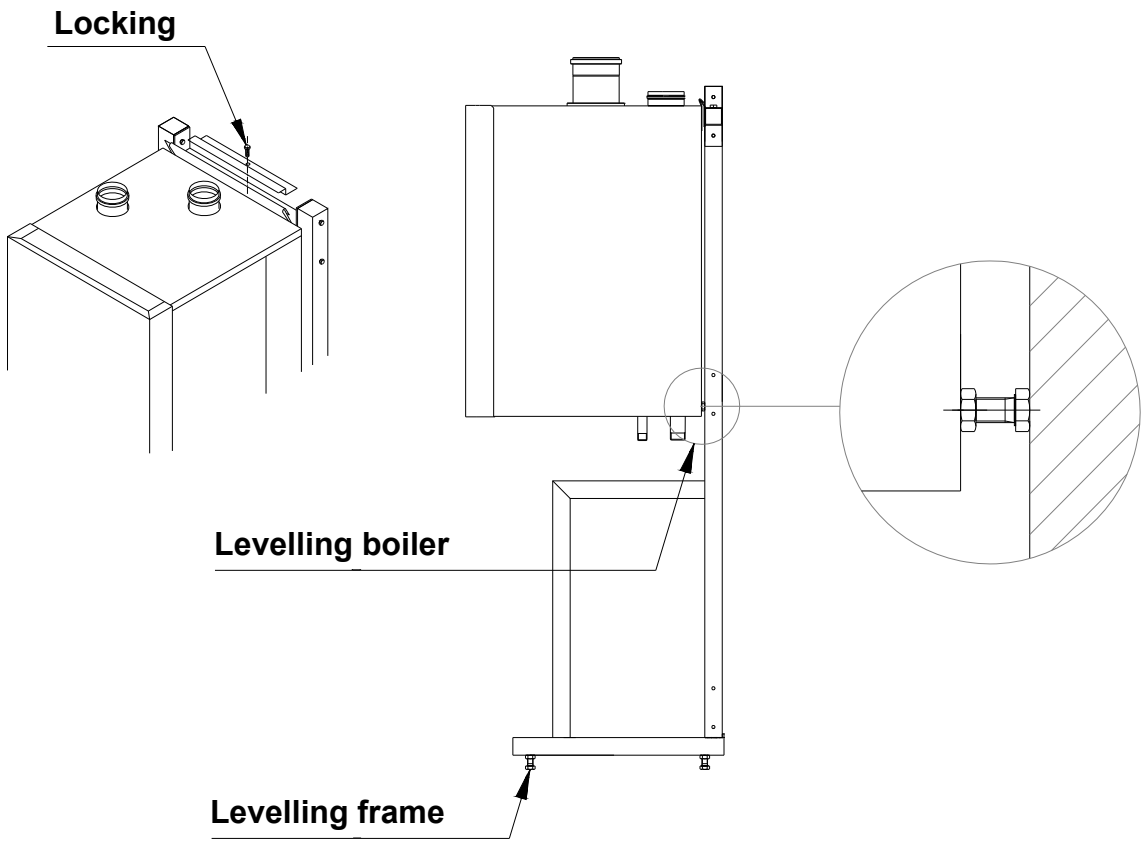

Figure 5. Mounting details.

7. Mounting the connecting sets

First connect the connecting sets hand-tight to the boiler connections. In a cascade set-up, do NOT use the T-pieces delivered with the boilers.
The shortest connecting set should be connected to the gas connection on the boiler.
Make sure to connect the flow connecting set (middle length) to the boiler flow connection (left-side connection) and the return connecting set (longest) to the boiler return connection (right-side connection).
The open connection in the flow connecting set is meant for a pressure relief valve, and the one in the return connecting set is to be used for a boiler bleeding valve.

NOTICE: For the S-CB PX 120 boiler the <u>return connecting set</u> differs, because of the external pump.

<u>Flow connecting set</u>

Connection to boiler

Connection for pressure relief valve

Ball valve

Coupling to flow header

<u>Return connecting set</u>

Connection to boiler

Connection for boiler bleed valve

Check valve

Ball valve

Coupling to return header

<u>Gas connecting set</u>

Connection to boiler

Gas isolator

Coupling to gas header

S-CB PX boiler with external pump:

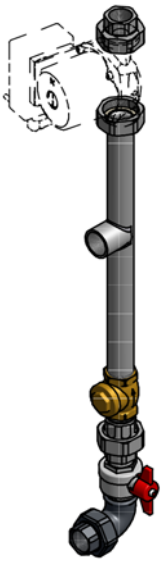

Connection to boiler

Pump location

Connection for boiler bleed valve

Check valve

Ball valve and coupling to return header

Figure 6. Connecting sets.

STREBEL HEATING TECHNOLOGY

Connecting sets for boilers S-CB⁺ 60 – 120 and S-CB PX 120 **NOTICE:** Return set for the S-CB PX 120 differs from S-CB⁺120					
Connecting set	**part.no.**	**1 boiler**	**2 boilers**	**3 boilers**	**4 boilers**
Connecting set gas = ¾"	E04.000.377	1x	2x	3x	4x
Flow connecting set = 1"	E04.000.373	1x	2x	3x	4x
Return connecting set S-CB⁺ = 1"	E04.000.374	1x	2x	3x	4x
Return connecting set S-CB PX = 1"	E04.000.417	1x	2x	3x	4x
Connection size relief valve and bleed valve: Both Rp 1"					

Connecting sets for boilers S-CB⁺ 150 – 180							
Connecting set	**part.no.**	**1 boiler**	**2 boilers**	**3 boilers**	**4 boilers**	**5 boilers**	**6 boilers**
Connecting set gas = 1"	E04.000.378	1x	2x	3x	4x	5x	6x
Flow connecting set = 1¼"	E04.000.375	1x	2x	3x	4x	5x	6x
Return connecting set = 1¼"	E04.000.376	1x	2x	3x	4x	5x	6x
Connection size relief valve and bleed valve: Both Rp 1¼"							

Table 3. NB! → Part numbers are corresponding to one connecting set, so order the correct quantity of sets.

8. Mounting the hydraulic group

Connect the gas header to the gas connecting sets.
Connect the flow header to the flow connecting sets.
Connect the return header to the return connecting sets.
Mount all headers with the clamps to the frame.

All lines/piping must be mounted free of tension.
The weight of all the components should be supported separately of the boiler so there is no force on the connections.
This might influence the mounting position of the boiler.

When all parts are mounted in the right place, and are free of tension, fasten all couplings and fasten the clamps.

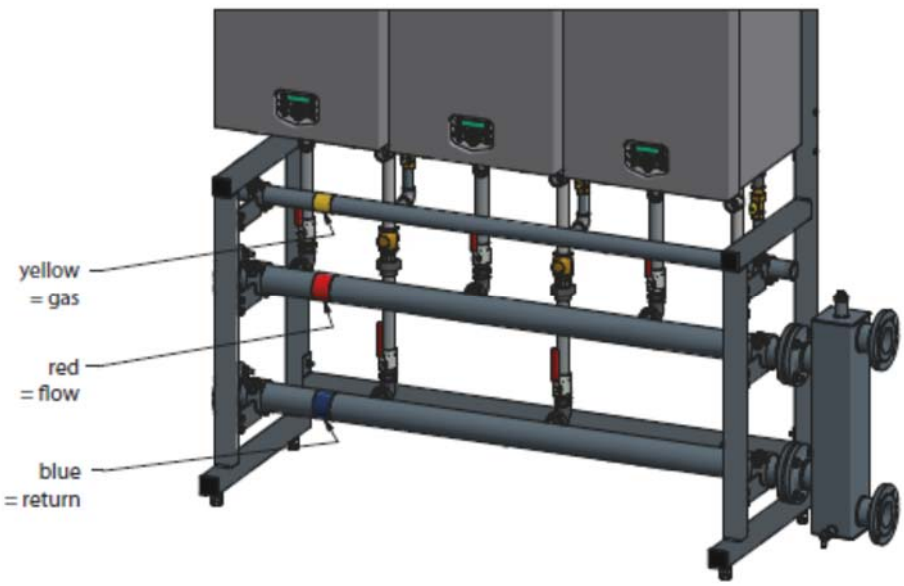

Figure 7. Hydraulics.

8.1 Hydraulic group for 2 boilers S-CB+ 60–120 and/or S-CB PX 120

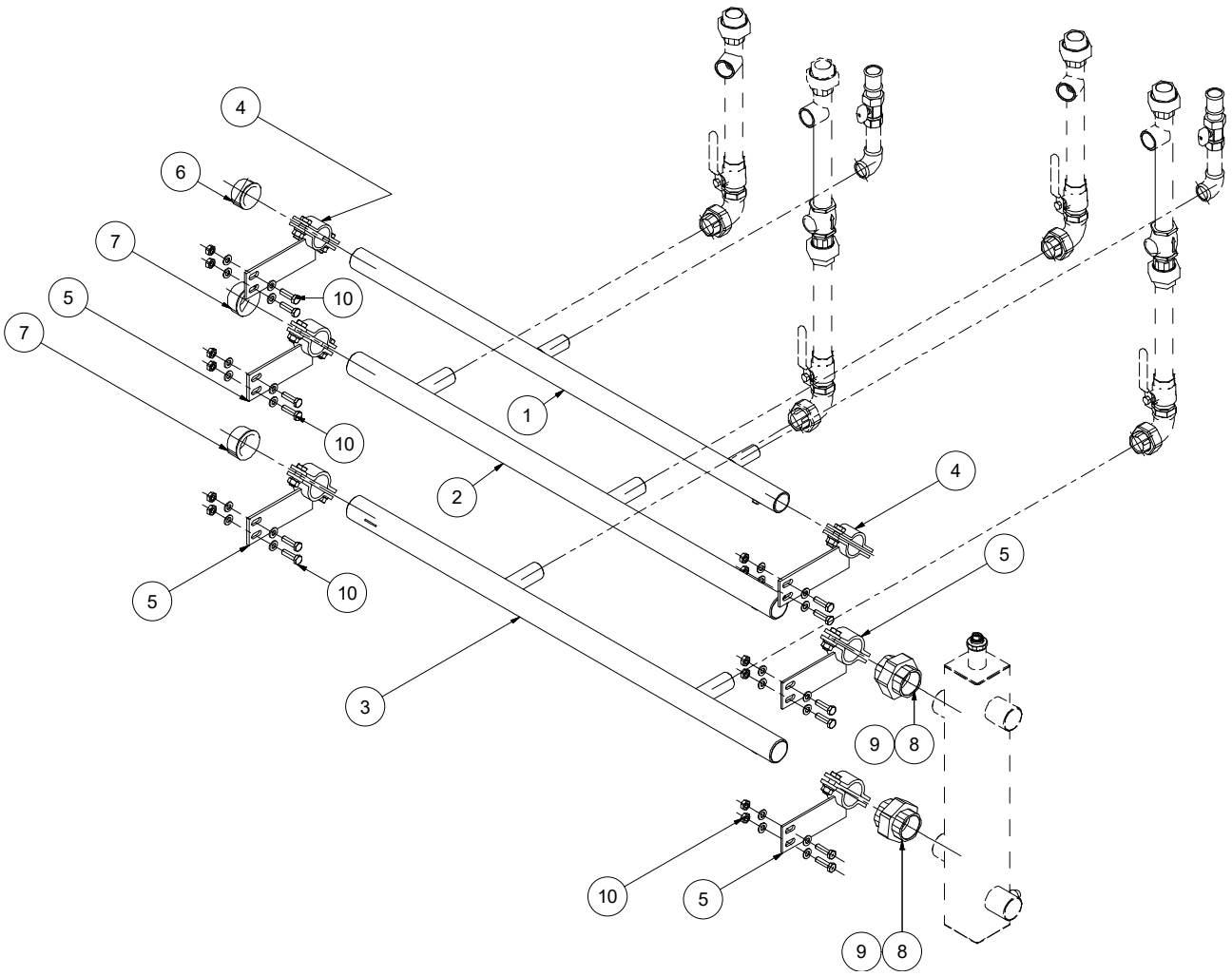

Connecting sets in the picture are S-CB+ versions.

Hydraulic group for:		2 Boilers 60–120 E00.000. 152	
No.	**Description**	**Part number**	**Q**
1	Gas header	E02.025.014	1
2	Flow header	E02.032.006	1
3	Return header	E02.032.007	1
4	Clamp gas header	E01.000.205	2
5	Clamp flow/return header	E01.000.208	4
6	Seal cap gas header	E04.005.083	1
7	Seal cap flow/return header	E04.005.061	2
8	Coupling (2-parts)	E04.002.078	2
9	Gasket for coupling	E07.003.059	2
10	Bolt + nut + washer	M10 x 35	24

8.2 Hydraulic groups for 3 and 4 boilers S-CB⁺ 60–120 and/or S-CB PX 120

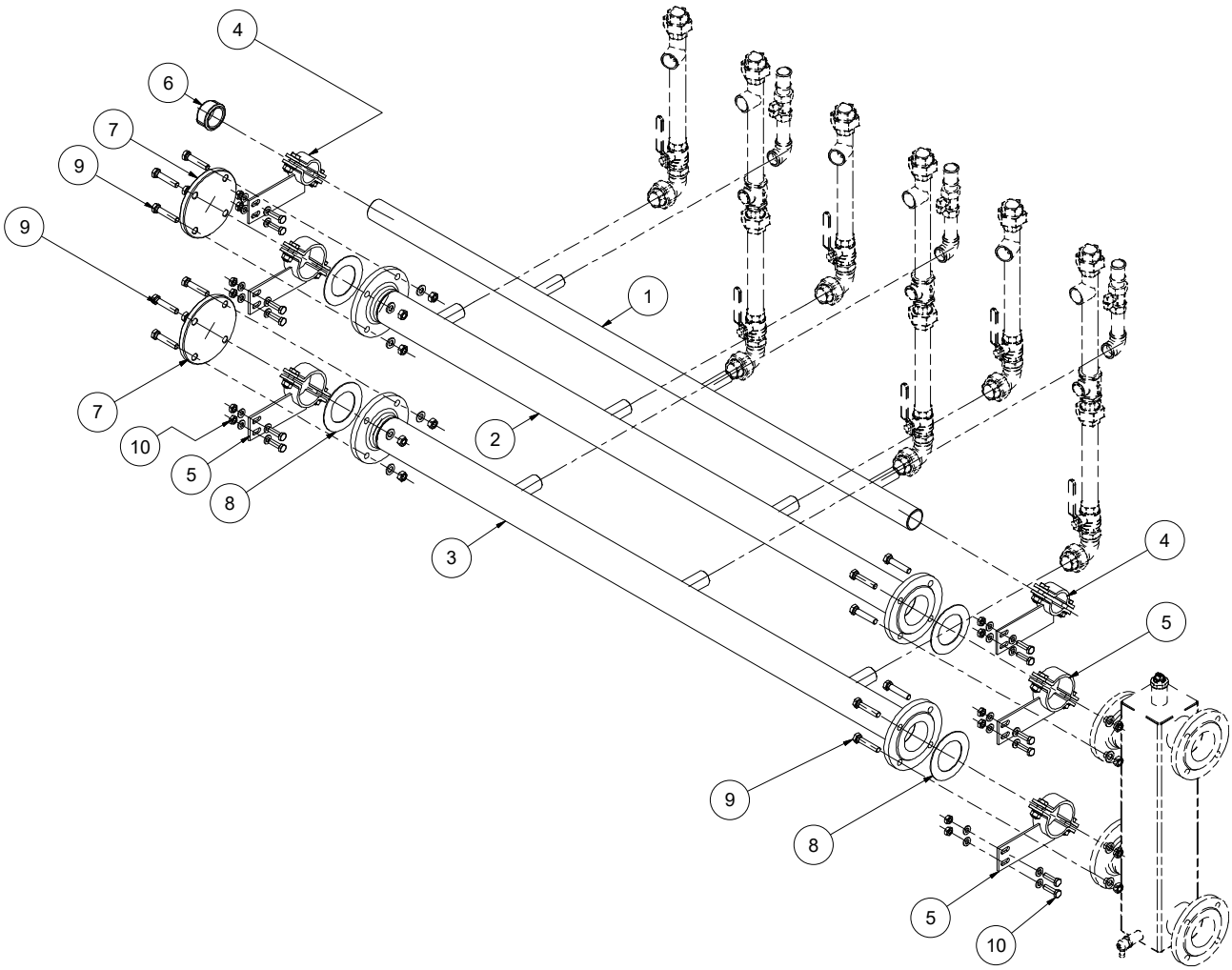

Connecting sets in the picture are S-CB⁺ versions.

Hydraulic group for:		3 Boilers 60–120 E00.000.186		4 Boilers 60–120 E00.000.154	
No.	**Description**	**Part no.**	**Q**	**Part no.**	**Q**
1	Gas header	E02.032.008	1	E02.027.018	1
2	Flow header	E02.039.011	1	E02.028.061	1
3	Return header	E02.039.012	1	E02.028.060	1
4	Clamp gas header	E01.000.208	2	E01.000.209	3
5	Clamp flow/return header	E01.000.210	4	E01.000.211	6
6	Seal cap gas header	E04.005.061	1	E04.005.058	1
7	Blind flange for flow/return header	E04.010.182	2	E04.010.180	2
8	Gasket for flange	E07.003.071	4	E07.003.072	4
9	Bolt + nut + washer	M12 x 60	16	M16 x 60	16
10	Bolt + nut + washer	M10 x 35	24	M10 x 35	36

8.3 Hydraulic groups for 2 and 3 boilers S-CB+ 150–180

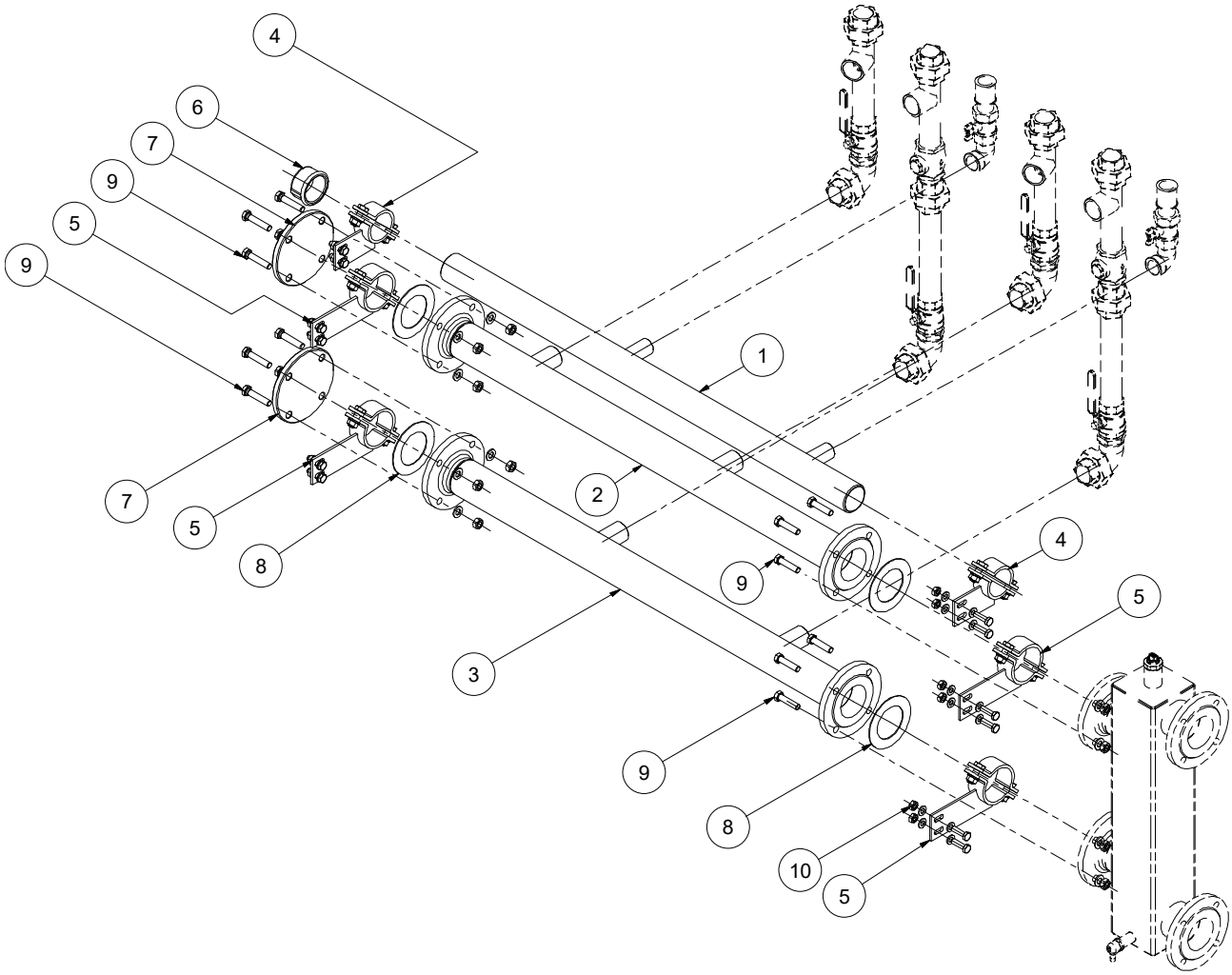

Hydraulic group for:		2 Boilers 150–180 E00.000.155		3 Boilers 150–180 E00.000.156	
No.	**Description**	**Part no.**	**Q**	**Part no.**	**Q**
1	Gas header	E02.027.019	1	E02.027.017	1
2	Flow header	E02.039.009	1	E02.028.056	1
3	Return header	E02.039.010	1	E02.028.057	1
4	Clamp gas header	E01.000.206	2	E01.000.206	2
5	Clamp flow/return header	E01.000.210	4	E01.000.211	2
6	Seal cap gas header	E04.005.058	1	E04.005.058	1
7	Blind flange for flow/return header	E04.010.182	2	E04.010.180	2
8	Gasket for flange	E07.003.071	4	E07.003.072	4
9	Bolt + nut + washer	M12 x 60	16	M16 x 60	16
10	Bolt + nut + washer	M10 x 35	24	M10 x 35	24

8.4 Hydraulic group for 4 boilers S-CB+ 150–180

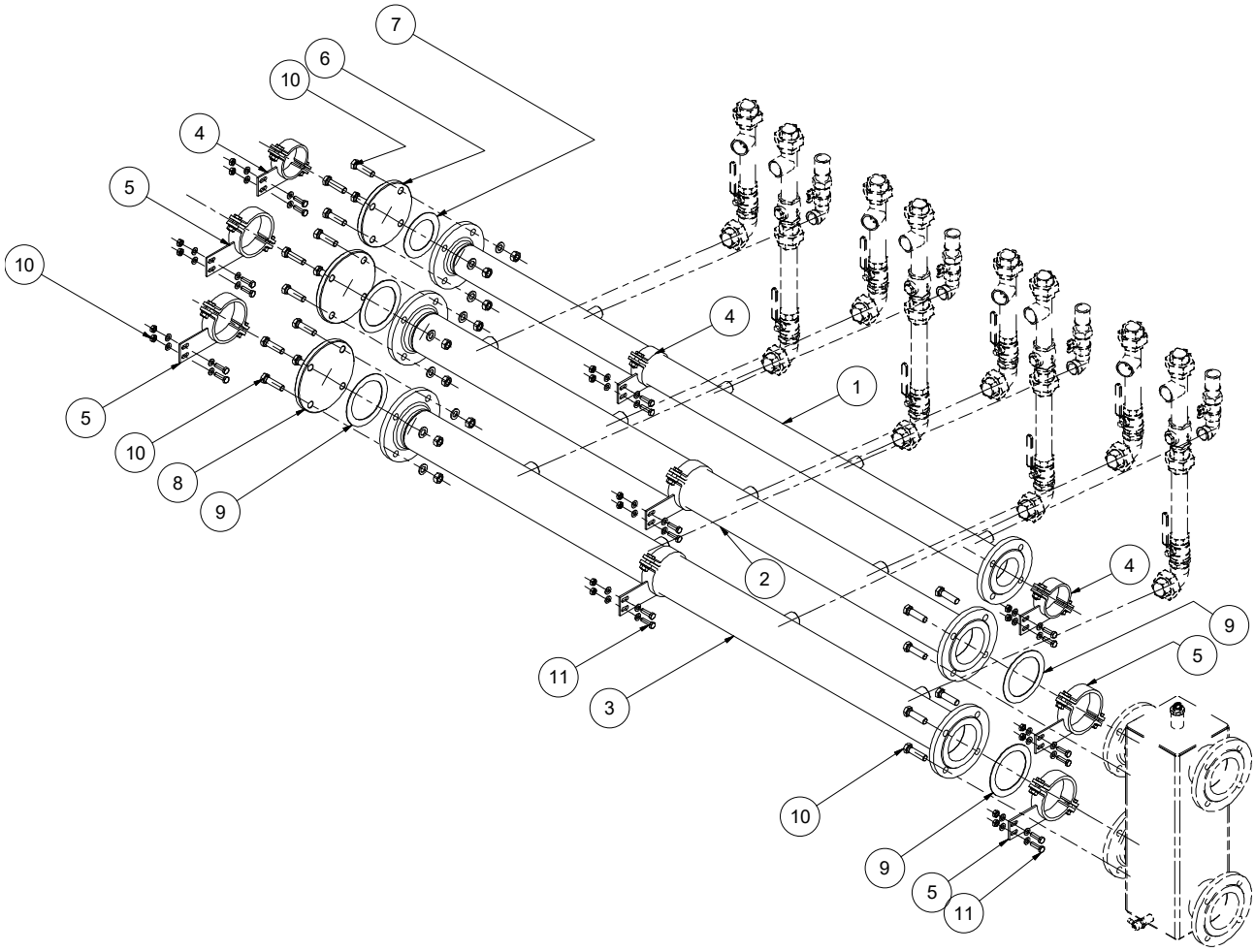

Hydraulic group for:		4 Boilers 150–180 E00.000.157	
No.	**Description**	**Part no.**	**Q**
1	Gas header	E02.028.058	1
2	Flow header	E02.031.005	1
3	Return header	E02.031.006	1
4	Clamp gas header	E01.000.207	3
5	Clamp flow/return header	E01.000.212	6
6	Blind flange for gas header	E04.010.180	1
7	Gasket for flange	E07.003.072	1
8	Blind flange for flow/return header	E04.010.183	2
9	Gasket for flange	E07.003.073	4
10	Bolt + nut + washer	M16 x 60	20
11	Bolt + nut + washer	M10 x 35	36

8.5 Hydraulic groups for 5 and 6 boilers S-CB+ 150–180

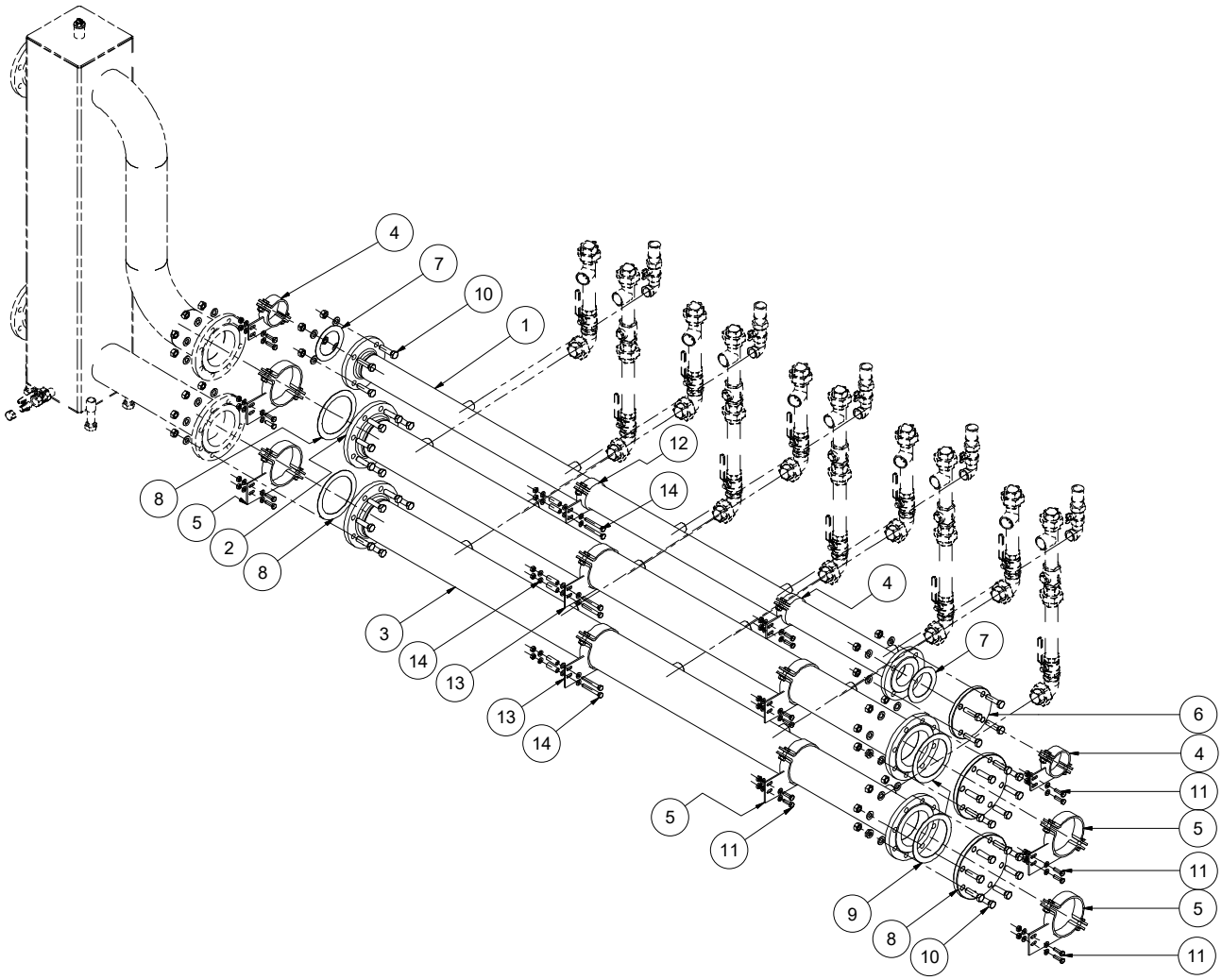

Hydraulic group for:		5 Boilers 150-180 E00.000.205		6 Boilers 150-180 E00.000.204	
No.	**Description**	**Part no**	**Q**	**Part no**	**Q**
1	Gas header	E02.028.091	1	E02.028.094	1
2	Flow header	E02.028.092	1	E02.028.096	1
3	Return header	E02.028.093	1	E02.028.095	1
4	Clamp gas header	E01.000.207	3	E01.000.207	2
5	Clamp flow/return header	E01.000.367	6	E01.000.367	4
6	Blind flange for gas header	E04.010.180	1	E04.010.180	1
7	Gasket for flange gas	E07.003.072	2	E07.003.072	2
8	Blind flange for flow/return header	E04.010.210	2	E04.010.210	2
9	Gasket for flange flow/return	E07.003.091	4	E07.003.091	4
10	Bolt + nut + washer	M16x60	20	M16x60	20
11	Bolt + nut + washer	M10x35	18	M10x35	12
12	Clamp gas header with spacer	E01.000.381	1	E01.000.381	2
13	Clamp flow/return header with spacer	E01.000.382	2	E01.000.382	4
14	Bolt + nut + washer + spacer	M10x80 spacer L=45	6	M10x80 spacer L=45	12

9. Low Loss Headers

The low loss header can be mounted on the right-hand or the left-hand side of the flow and return headers, whatever is the best place to connect the headers to the heating installation.
The opposite end of the flow and return headers must be blocked by the supplied caps or flanges.

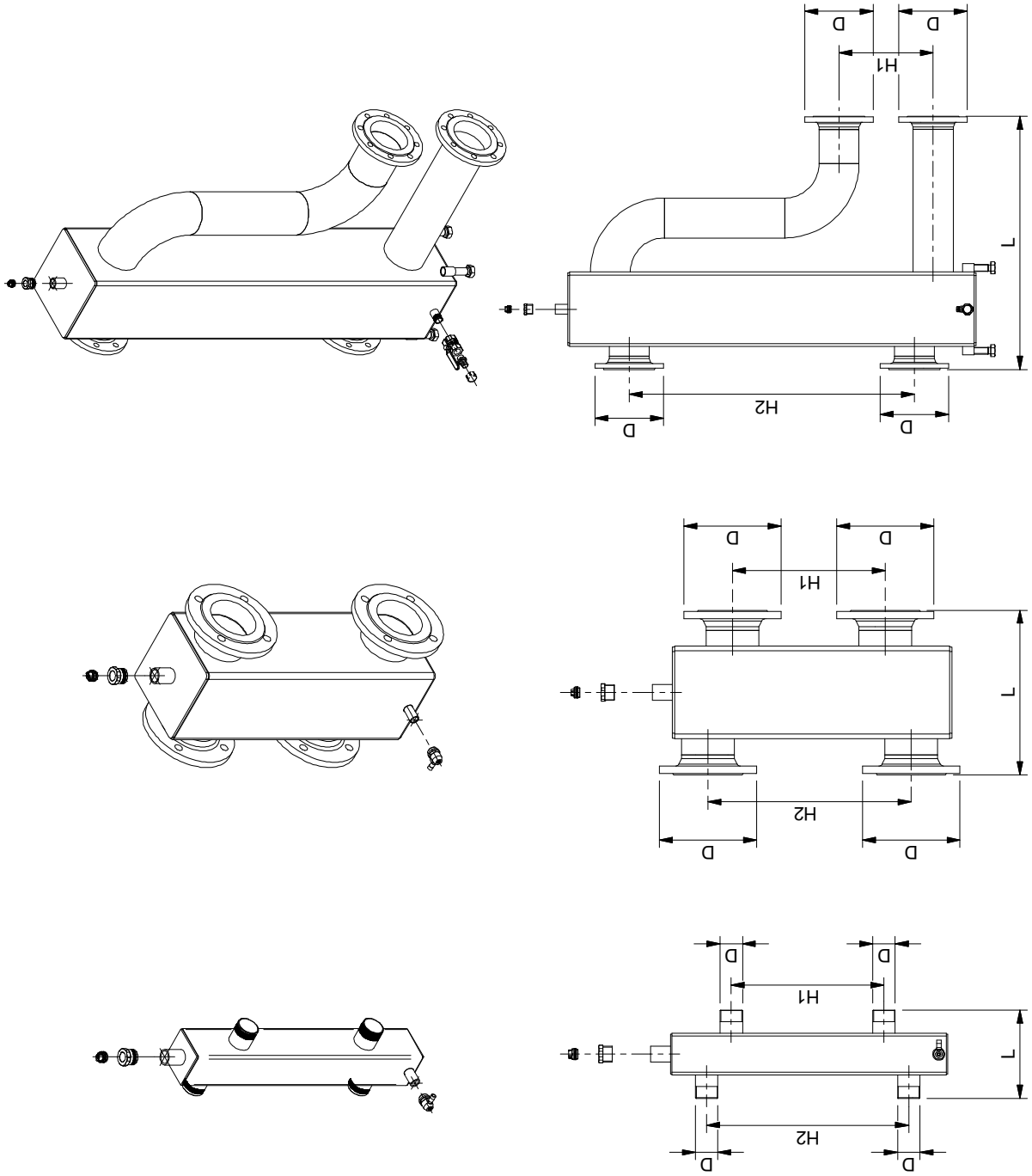

Figure 8. Low velocity headers.

Low Loss Headers for S-CB+ Boilers 60 – 120			
Header Group	**2 Boilers: E00.000.164**	**3 Boilers: E00.000.165**	**4 Boilers: E00.000.166**
Drawing	Fig. 8.1	Fig. 8.2	Fig. 8.2
Venting valve ½" [1]	E04.015.066	E04.015.066	E04.015.066
Drain valve ½"	E04.008.025	E04.008.025	E04.008.025
D	R 1½"	DN 65 PN6 (2½")	DN 80 PN6 (3")
H1 (boiler-side)	330	330	330
H2 (installation-side)	436	487	440
L	190	265	290

Low Loss Header for S-CB+ Boilers 150 – 180				
Header Group	**2 Boilers E00.000.165**	**3 Boilers E00.000.166**	**4 Boilers E00.000.167**	**5 or 6 Boilers E00.000.203**
Drawing	Fig. 8.2	Fig. 8.2	Fig. 8.2	Fig. 8.3
Venting valve ½" [1]	E04.015.066	E04.015.066	E04.015.066	E04.015.066
Drain valve ½"	E04.008.025	E04.008.025	E04.008.025	E04.008.034
D	DN 65 PN6 (2½")	DN 80 PN6 (3")	DN 100 PN6 (4")	DN 125 PN 6 (5")
H1 (boiler side)	330	330	330	330
H2 (installation side)	487	440	439	1000
L	265	290	355	887

Table 4. Low velocity headers.

***** We standard supply a manual venting valve that can be mounted on top of the low loss header to manually bleed the air from the low loss header. Instead of the ½" manual bleed valve, an automatic air vent can be installed, up to 1"max.

10. Flue gas and air supply

10.1 Individual or common flue systems

The Strebel S-CB $^{+}$/ PX 120 cascade sets can be equipped with individual or common flue systems.
Using separate flue systems is always preferred above common flue systems. Only when separate flue systems can't be used, one should choose to use a common flue system.

When chosen for an individual flue system each boiler has its individual flue gas outlet and air supply lines to the outside of the building. This may be executed in *parallel* or *concentric* flue gas and air supply pipes. When chosen for a common flue system this must be executed in *parallel* flue gas and air supply pipes.

10.2 Individual flue systems

Individual flue systems can be chosen as mentioned in the S-CB^{+} instruction manual.
The flue system should comply with the chapter **"Flue gas and air supply system"** of the Strebel S-CB^{+} / S-CB PX manual.
For each boiler, the combined resistance of the individual flue gas and air inlet pipe can be calculated and checked with the maximum for the gas-side resistance.
Resistance table and example calculations are given in the same forementioned chapter of the S-CB^{+} manual.

Please note: Using this kit does not determine the spacings between exhaust terminals and air intake terminals.

Please refer to the relevant British Standards:
 BS 6644 – Installation of gas fired hot water boilers of rated inputs between 70kW – 1.8MW.

Please refer to the Institution of Gas Engineers and Manager Documents (IGEM):
 IGEM/UP/10 Edition 4 – Installation of gas fired hot water boilers of rated inputs between 70kW – 20MW.

10.3 Common flue systems

Common flue systems must be designed according to:
 EN 13384-2 "Chimney – Thermal and fluid dynamic calculation methods – Part 2: Chimneys serving more than one heating appliance."

Strebel Ltd Technical can advise on what software can be used for doing these calculations. Do not attempt to design common vent systems without the appropriate software and training.

For common flue gas systems, the parameter P5DB has to be adjusted to prevent recirculation of flue gases.

10.4 Installation examples flue gas systems.

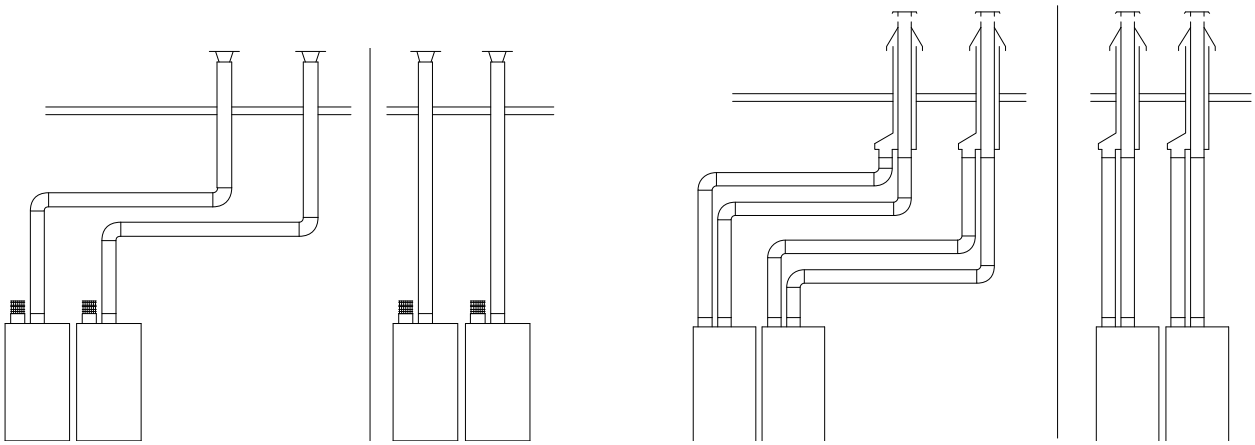

Figure 9. Examples of separate / individual flue systems.

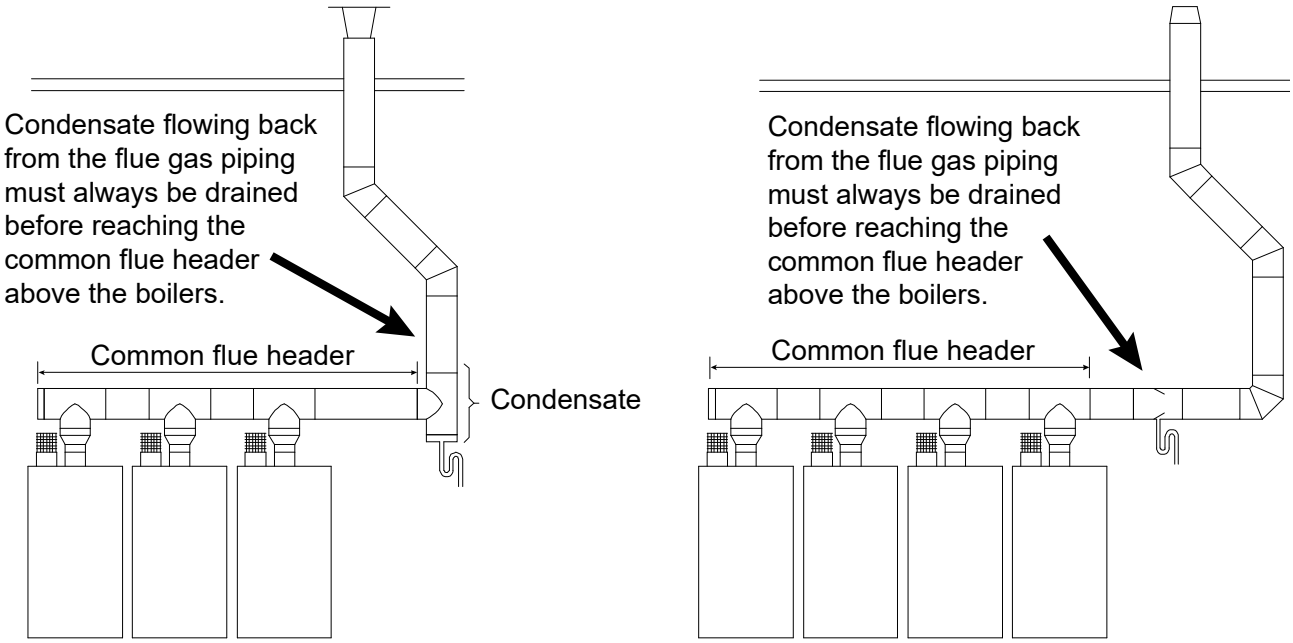

Figure 10. Examples of common flue systems.

11. Installation

Complete the installation with all necessary parts, valves, non-return valves, strainers, air separators and expansion vessel, and connect the low velocity header to the heating installation (see hydraulic examples).

Mount the flue gas and air supply lines according to the recommendations of the S-CB+ / S-CB PX 120 manual and the recommendations in chapter 10. “Flue gas and air supply” of this manual.

Complete all wiring of the boilers according to the boiler manual.

First the “Master” boiler has to be determined. Connect all wiring of thermostat, outside temperature sensor, flow temperature sensor and eventually system pump to the Master.

Also, a two-wire cable has to be connected between all boilers (cascade-connection).

Fill the installation with water and follow all recommendations of the S-CB+ manual. Insulate all water piping as far as necessary.

In the following, two installation examples are given.

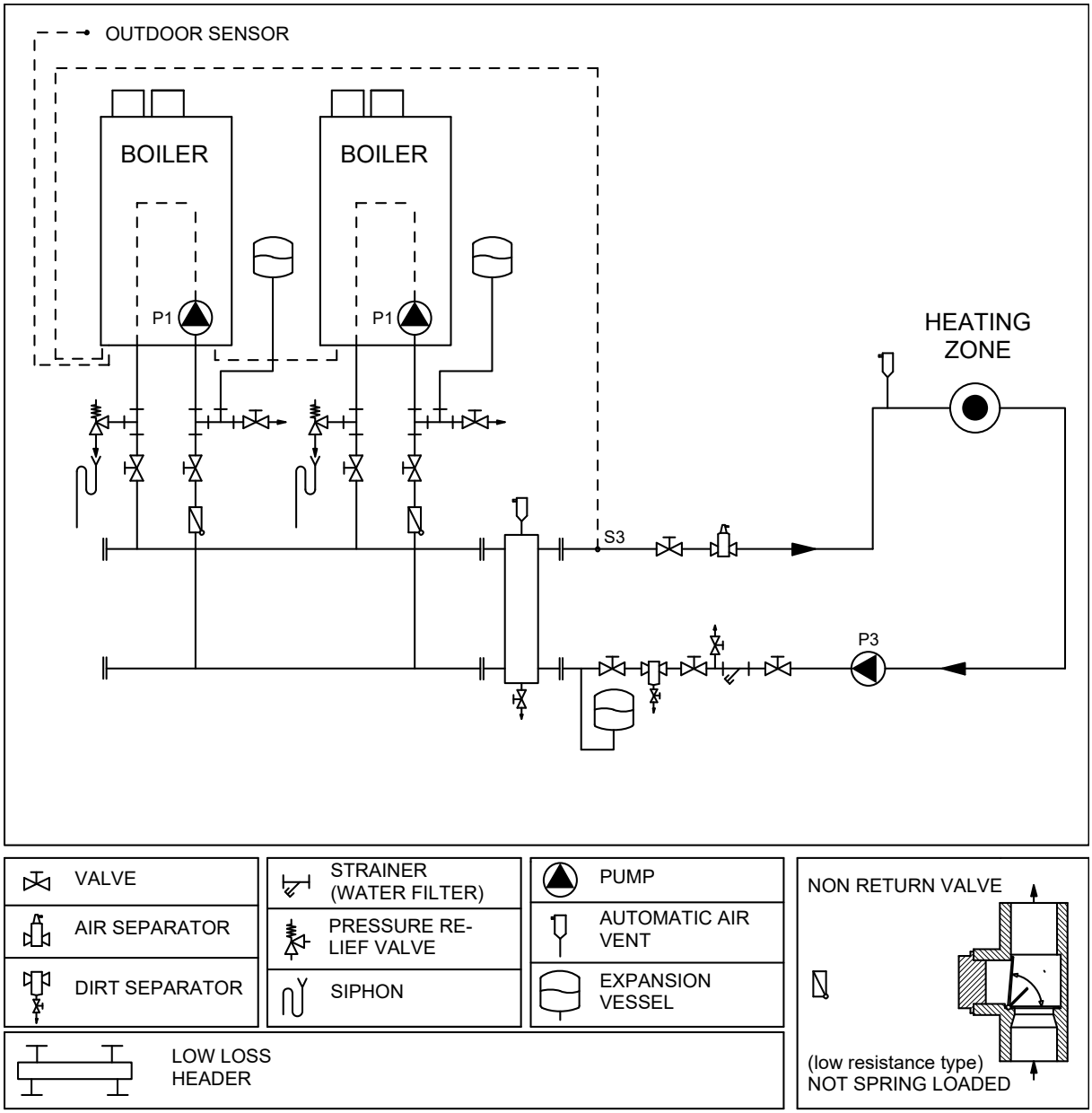

Figure 11. Hydraulic example, heating only. NB! For S-CB PX 120 boilers, P1 is an external pump.

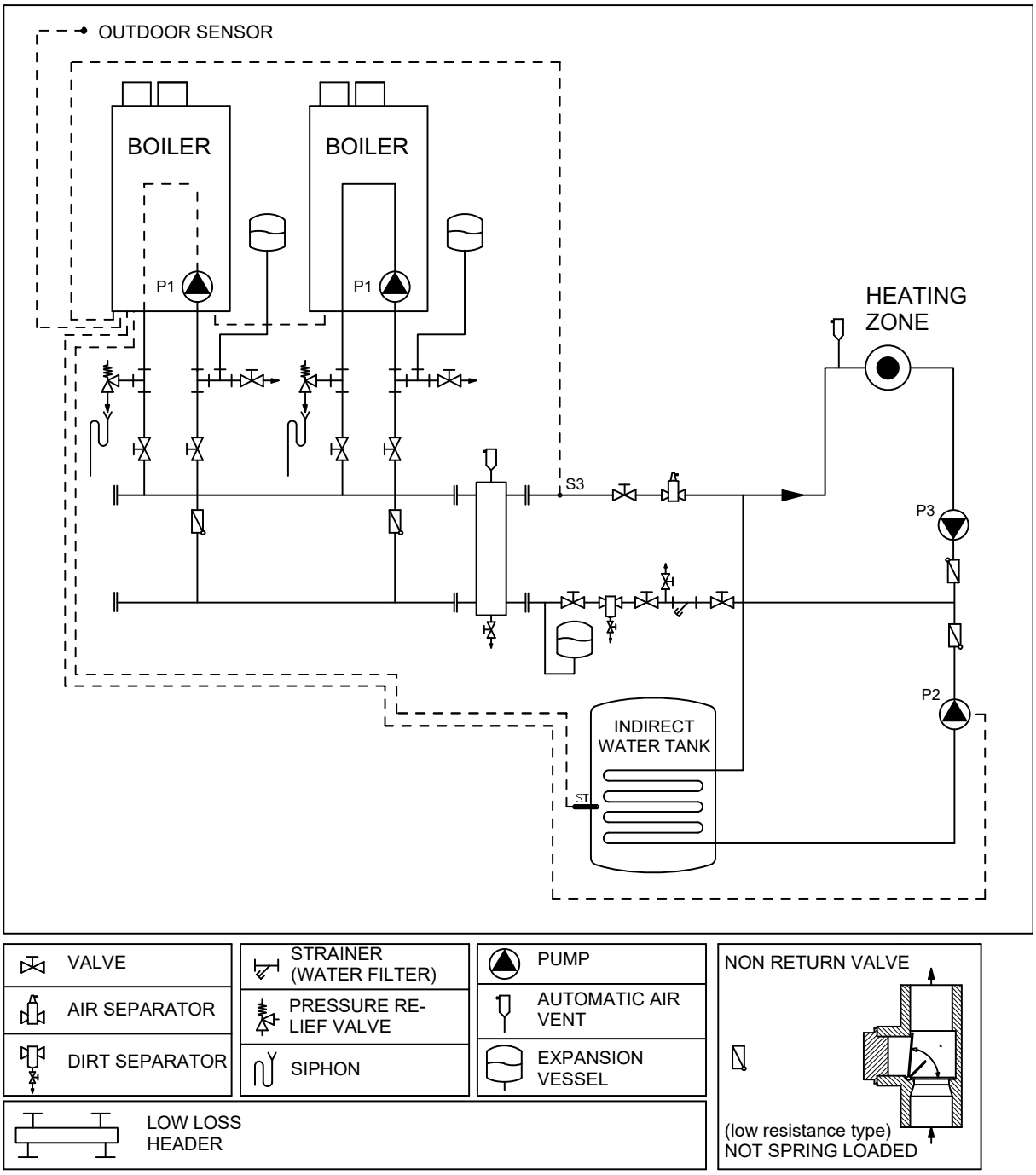

Figure 12. Hydraulic example, heating and indirect domestic hot water. NB! For S-CB PX120 boilers, P1 is an external pump.

Parameter change is needed. Set parameter C3 (P5DC) to “0”’ (default = “1”). See Chapter 12.3 for setting procedure.

IMPORTANT NOTE:
The hydraulic piping of the Strebel cascade systems already contains non-return valves underneath each boiler. When other hydraulic systems are used, non-return valves must be fitted in the return pipe of each boiler.

12. Parameters

Before commissioning the cascade installation, a number of parameters has to be changed.
These parameters can be programmed on the unit itself, without the use of a computer.

Changes in parameter may only be carried out by a skilled commissioning/service engineer, who has had specific training for setting up the S-CB+ / S-CB PX 120 range boilers. He will be able to check whether the installation functions correctly after the parameter change has been done.

For programming, **all parameters** of the boilers one needs to have an interface cable for connecting the laptop to the boiler control and a laptop with the appropriate S-CB+ software. This software is used for programming but also shows all measured temperatures and cascade behaviour during operation and service/fault history.

12.1 Parameter settings for cascaded boilers

Before programming the cascaded boilers, make sure that all boilers are connected (wire) with each other. Use connection 17 and 18 of each boiler on S-CB+ boilers – Use connection 15 and 16 on S-CB PX 120.

Remind: Do not alternate these connections, so always connect 17 to 17 and 18 to 18 on the S-CB+ version and 15 to 15 and 16 to 16 on the PX 120.

After connection, every boiler must be programmed as follows:

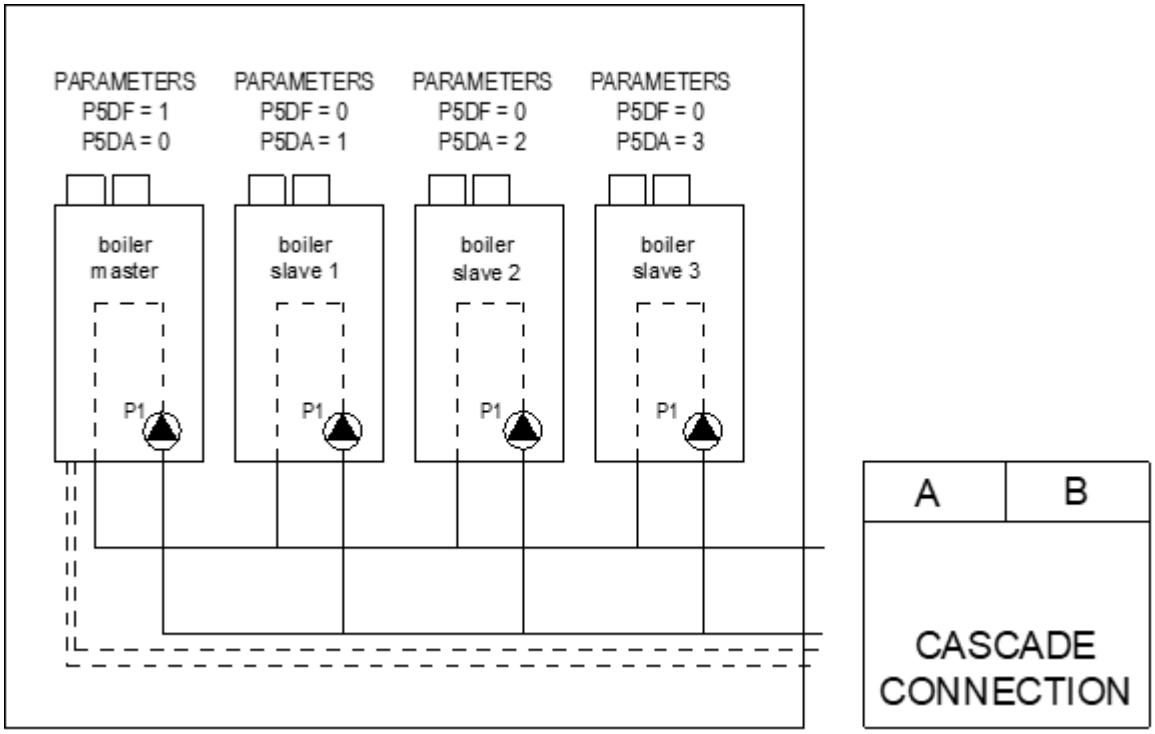

Figure 13. Parameters.

12.2 Control panel / display unit

CONTROL PANEL

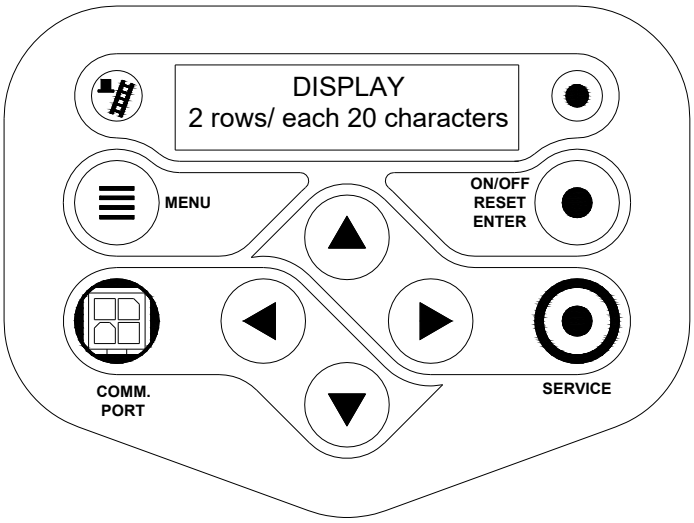

ON/OFF RESET ENTER	Press and hold for 6 seconds to switch boiler on/off. Is also used as RESET button and ENTER button when programming.
COMM. PORT	Connector for connecting computer cable.
MENU	Buttons can be pushed to open menu.
	Buttons to toggle through measured temperatures. Also used for navigating through the menus and for changing values.
SERVICE	Button to activate service function (hold for 3 seconds).
	Schornsteinfeger function (only for Germany).
	Light: lights when controller detects good flame signal. Lights when burner is burning.

12.3 Setting the parameters using the control panel

Programming of the boiler cascade can be done using the control panel. Press the [MENU] button and select the [PARAMETER] menu. See graphics below.

Operating screen:

H	E	A	T	I	N	G	:	S	T	A	N	D	-	B	Y				
>	>	>	:	1	2	3	.	4	°	C	(	1	2	3	.	4	°	C	)

↓

Press [MENU]

↓

Main menu screen:

M	a	i	n		M	e	n	u											
S	e	t	p	o	i	n	t	s											

↓

Select "Parameter" using [◄] & [►] and press [ENTER]

After this use the following password “**4153**”.

Parameter menu:

I	n	s	t	a	l	l	e	r		c	o	d	e						
								0	0	0	0								

↓ ↓ ↓ ↓ ↓

Enter the 4-digit code with the [◄] & [►] and the [▲] & [▼] buttons and select [ENTER]
The code will blink a few seconds and when entered correctly, the following parameters will be displayed.

Now for every single boiler of the cascade the following two parameters must be selected and programmed according to the above drawing.

Master:
C5 P5 DF **1**
C2 P5 DA **0**

Slave 1:
C5 P5 DF **0**
C2 P5 DA **1**

Slave 2:
C5 P5 DF **0**
C2 P5 DA **2**
And so on.

Menu C: Cascade

	C	5				C	a	s		S	i	/	M	a					
											0								

Function for the cascading of the boiler(s).
This parameter sets the function of the boiler at a cascade alignment
0 = Single / Slave unit
1 = Master unit

Menu C: Cascade

	C	2				B	u	s		a	d	d	r	e	s	s			
											0								

Function for the cascading of the boiler(s).
This parameter determines the address of the boiler for the total cascading control.
Master = 0, Slave1 = 1, etc.

When the correct parameter is set, this must be confirmed at the confirmation screen. After activation, the value will blink for a few seconds while the parameter is programmed into the boiler.

When cascade connection is programmed correctly the boiler display will show the following.

Explanation "Cascade communication indicator"
NO CASCADE COMMUNICATION

>	>	>	no.1

Always showing the fixed ">>>"

CORRECT CASCADE COMMUNICATION

>		>	no.1
	>		no.2

Showing alternating no.1 & no.2 with 1 second interval.

12.4 Monitor screens

During normal operation and stand-by, the "◄" and "►" buttons can be used to show some boiler information, including measured temperatures, settings and data. In the following graphs is explained which cascade information (screen 11 +12) can be shown in the display.
When no button is activated for 2 minutes the display will return to its status display.

Pressing [◄] or [►] while being at the "operating screen" toggles through the screens below.
When pressing [ON/OFF, RESET, ENTER] or [MENU] at any time the display returns to the base menu.

SCREEN 11																			
C	a	s	c		D	e	s	i	g	n					0					0 = MASTER, 1 ..... 11 = SLAVES
C	a	s	I	n	f			0	1	2	3	4	5	6	7	8	9	A	B	Displays number, priority and state of cascade boilers.

SCREEN 12																				
C	a	s	c		P	o	w	e	r		9	9	9	%		9	9	9	%	% heat demand of total (cascade) power availabe (%).
D	u	a	I		B	u	r	n	e	r	:				N	o				One heat exchanger equipped with two burners: "Yes" or "No".

DESCRIPTION "CASCINFO" Screen 11

Shows the number of boilers connected with the Cascade. The Master/Lead boiler is designated as 0. Slave/Lag boilers will be designated 1, 2, 3, 4, 5, 6, 7, 8, 9, A, B. When a "-"is used instead of a number, than that boiler is either not connected, or in a lockout mode and not available for the Cascade. When an "x" is used instead of a number, than that boiler is connected, but in lockout mode.
When a "d" is used instead of a number, than that boiler is handling a DHW demand.
When the number is flashing, then that boiler is providing heat to the cascade. When the leading boiler is changed according to the set priority change time, than that boiler's address will be shown first in the row of numbers.

Example 1: "3 4 5 - - - - - - 0 1 2"
There are six boilers present and nr. 3 has priority.

Example 2: "3 4 x - - - - - - d 1 2"
There are six boilers present and nr. 3 has priority. Boiler 0 is heating up an indirect DHW tank. Boiler 5 is present, but in a lock-out.

13. Cascade control

13.1 Output control

The total cascade set-up will act as one single big boiler, switching on- and off boilers, depending on the total load necessary to adjust and keep the flow temperature at the calculated value.
When the heat demand rises, more boilers are switched on, and when heat demand falls, one or more boilers will be switched off. The boiler that was switched on last, will be switched off first (see table below).

13.2 Boiler sequence

To distribute operating hours equally over all boilers, the working sequence of the boilers will change every two hours.

Hour	Switching ON sequence	Switching OFF sequence
X	Master – Slave 1 – Slave 2 – Slave 3 – Slave 4 – Slave 5 – Slave 6 – Slave 7	Slave 7 – Slave 6 – Slave 5 – Slave 4 – Slave 3 – Slave 2 – Slave 1 – Master
X+1	Slave 7 – Master – Slave 1 – Slave 2 – Slave 3 – Slave 4 – Slave 5 – Slave 6	Slave 6 – Slave 5 – Slave 4 – Slave 3 – Slave 2 – Slave 1 – Master – Slave 7
X+2	Slave 6 – Slave 7 – Master – Slave 1 – Slave 2 – Slave 3 – Slave 4 – Slave 5	Slave 5 – Slave 4 – Slave 3 – Slave 2 – Slave 1 – Master – Slave 7 – Slave 6
X+3	Slave 5 – Slave 6 – Slave 7 – Master – Slave 1 – Slave 2 – Slave 3 – Slave 4	Slave 4 – Slave 3 – Slave 2 – Slave 1 – Master – Slave 7 – Slave 6 – Slave 5
……..	……	……

Table 5. Boiler sequence example of an eight-boiler cascade.

In this table, a total of eight boilers (one master, seven slaves) is mentioned as an example, in practice the maximum number in a cascade, without extra (external) control, is twelve boilers.

14. Options

To complete your cascade set-up / heating installation you can choose for next options:

	Room Temperature Controllers		
1	RC Open-Therm with ambient sensor	Modulating	S04.016.355
2	RC Open-Therm, allows for a remote ambient sensor to fit.	Modulating	S04.016.358
3	RCH E-bus with ambient sensor (for EBC)	Modulating	S04.016.357
	Sensors		
4	Outside air temperature sensor	12kOhm@25°C	E04.016.585
5	External flow temperature sensor low velocity header	10kOhm@25°C	E04.016.304
6	External ambient sensor for RC and RCH	5kOhm@25°C	E04.016.359
7	External flow temperature sensor heating circuit (zone)	5kOhm@25°C	E04.016.363
8	Calorifier Temperature Sensor	10kOhm@25°C	E400277
	Parameter programming		
8	Interface cable and software to programme the boiler		E400278

Table 6. Accessories and parts.

RC OpenTherm room temperature controller (1 and 2)
RCH E-bus room temperature controller for EBC (3)

Figure 14..

- notes -

- notes -

Strebel Ltd
Unit 10, Invincible Industrial Estate,
Invincible Road, Farnborough,
Hampshire, GU14 7QU.

T 01276 685422
F 01276 685405
E info@strebel.co.uk
I www.strebel.co.uk

CE

STREBEL
HEATING TECHNOLOGY

Further information on our complete product range is available from our website.

CAST IRON – CONDENSING – STEEL SHELL – WATER HEATERS – RENEWABLES

FLUES – ACCESSORIES.